6360A SINGLE-LOOP PROCESS CONTROLLER

DIFFERENCES BETWEEN 6360 AND

6360A HARDWARE AND SOFTWARE

These amendments specify the hardware differences between the existing 6360 Multi-board Controller and the new 6360A Single-board (Issue 3) version, and also describe the differences between Issue 2 and Issue 8 software.

This document should be read in conjunction with the current 6360 Technical Manual (HA 075415 U003, Issue 2, rev A, June 86), and the section numbering system used here refers to this manual.

Date : Apr. 88

Issue : 2; Rev. A

Part no : HA 075415 U003

Amendments

Turnbull Control Systems Limited
Broadwater Trading Estate Worthing Sussex BN14 8NW

Telephone Worthing (0903)205277
Telex 87437

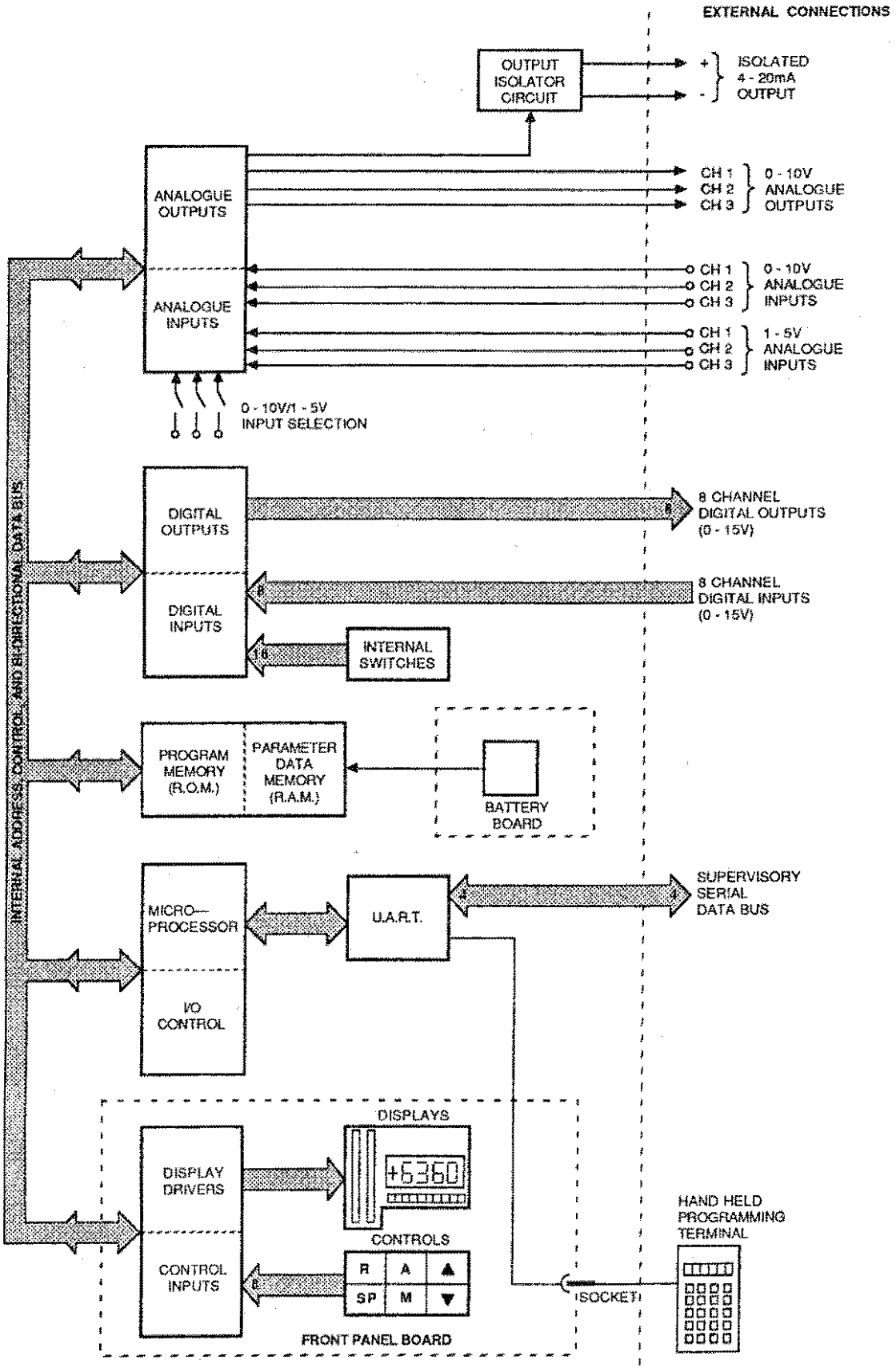

FIG. 1.1 6360A PROCESS CONTROLLER SCHEMATIC BLOCK DIAGRAM

Section 1 GENERAL DESCRIPTION

1.2 Features and General Description

The features of the 6360A Process Controller are best described with reference to the schematic Block Diagram shown in Fig. 1.1. With the 6360 each of the Controller functions such as Digital input/output or analogue input/output are implemented as a separate hardware block corresponding to a plug-in daughter board. The fundamental hardware change to the 6360A is that these hardware blocks have now been integrated onto the motherboard itself.

1.3 Mechanical Structure

The mechanical structure of the 6360A Process Controller is illustrated in Fig. 1.2 which clearly shows the single board construction. The Front-panel PCB (Assembly: AC 075225) is still connected to the Mother board via a 15-way single-in-line connector, and is secured via two retaining screws and the front support bar. A further support strut is fitted between the top of the support bar and the mother board to provide extra rigidity to the front panel.

The Motherboard (Assembly: AC 079040) now carries all the other electronics including the fuses, all the power supply circuitry and the plug-in battery board (Assembly: AC 076044). The rear end of the Mother board incorporates polarising slots to mate with polarising pegs fitted to the 48 way systems connector housed within the 7950 Universal Racking system.

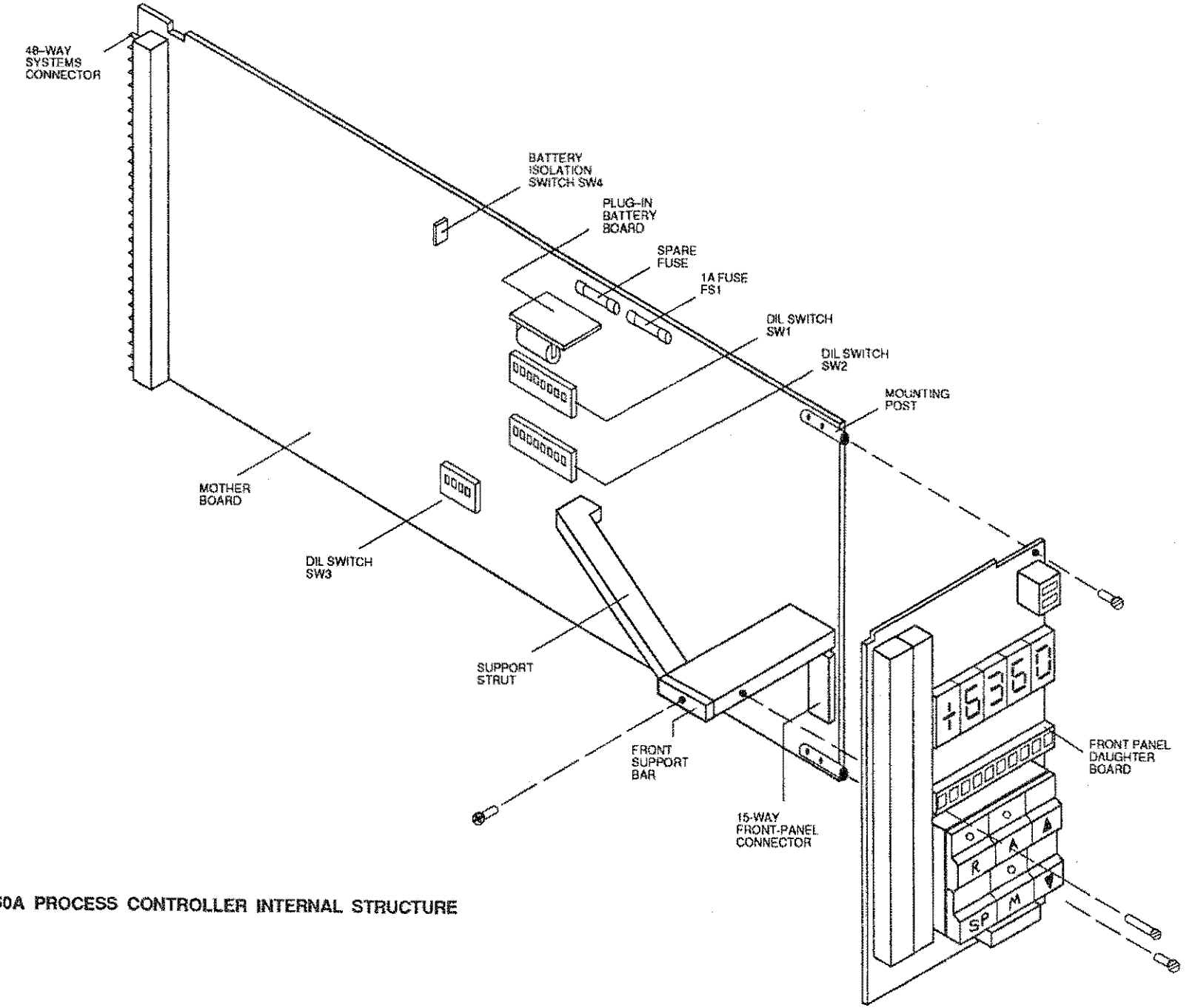

FIG. 1.2 6360A PROCESS CONTROLLER INTERNAL STRUCTURE

1.3.1 Rack, Bin and Panel Mounting Controllers

The 6360A is a pin-for-pin plug-in replacement for the 6360 Controller so it is fully compatible with all existing TCS packaging systems. Therefore it can plug directly into existing 6360 slots in type 7000 Racks, 7600 Bins, or 7900 Powered sleeves.

1.3.2 7950 Universal Packaging System

The preferred way of mounting 6360A Controllers is to use the 7950 Universal Packaging System. This offers a choice of 19 inch rack or panel mounting and is available in four standard widths for housing 1, 2, 3 or 6 Controllers. The Controllers plug into individual Termination Assemblies which are fitted at the rear of the 7950 rack frame. Each termination assembly consists of a 48-way backplane socket wired to a set of three 16-way screw terminal blocks for customer connections.

With the TRU option the rear panel screw terminals are left uncovered, cable trunking is provided at the bottom and a marker rail at the top of the rack frame. When CGP is specified the screw terminals are protected by a full-width hinge-down cover incorporating fixed cable entry glands and strain relief clamps. Cable trunking is also provided above the terminal blocks and individual instrument power supplies (8750's) may be fitted inside the hinge-down cover.

To mount the 6360A in a 7950 rack the TA 6360 rear Termination Assembly should be specified. In addition the TA 6360B or TA 6360D can be ordered where Burden resistors or power supply steering diodes are required. For further information refer to the TA 6360 sheet reproduced in Appendix F.

1.4 Daughter Board Functional Descriptions

1.4.2 Mother Board (Assembly : AC 079040)

Where the 6360 has individual plug-in daughter boards for each hardware function the 6360A integrates these onto a single motherboard. Specifically, the 6360A motherboard contains the following circuit blocks:-

a) Central Processor
b) Memory
c) Digital input/output
d) Analogue input/output
e) Input conditioning
f) Output isolator
g) +5V Power Supply
h) +15V, -15V Power Supply
i) Fuse

Where the functions of these circuits differ from the 6360 daughter boards, the details are given in the following sections.

b) Memory Circuit

A long-life Lithium primary cell is used to power the RAM chips when the main supply has failed. The Lithium Battery is not soldered directly to the motherboard itself but is fitted to a separate battery board (Assembly : AC 076044) which is connected to the motherboard via two 2-way plugs and sockets. This plug-on battery board is held in place by a board restraining bracket.

The battery supply can be isolated from the RAM by means of switch SW4. This switch is pushed in to connect the battery and pulled out to isolate the battery from the RAM.

(Note that with all Issue 2 motherboards this switch is designated SW3.)

c) Digital Input/Output Circuitry

The function of the 6360A digital input/output circuitry is the same as for the 6360. Physically, the only difference is that the two 8-way DIL switch banks SW1 and SW2 are located near the centre of the motherboard.

(Note that with early issue 2 motherboards these switches are designated SW3 and SW4 instead of SW1 and SW2 respectively).

d) Analogue Input/Output Circuitry

The 6360 analogue input/output board has a 3-way multiplexer that only accepts 0-10V inputs, and the 1-5V to 0-10V conversion is carried out by the signal Conditioner board. The 6360A circuitry has an 8-way multiplexer the first 3 inputs being 1-5V and the second 3 inputs being 0-10V in operation. Three of the switches contained within 4-way DIL switch SW3 are then used to determine which of the three analogue input channels will be 0-10V or 1-5V signals.

(Note that with Issue 2 motherboards jumper plugs PL9, 10 and 11 are used for analogue input channel selection and DIL switch SW3 is not fitted.)

e) Input Conditioning Circuitry

The need for separate input conditioning amplifiers has been removed by having an 8-way analogue input multiplexer as described in Section 1.4.2 d).

f) Output Isolator Circuitry

The 6360A has circuitry to make the 3-Term control output available as a 4-20mA isolated signal. Unlike the 6360 it uses a fourth analogue output channel for this rather than buffering the channel 1 signal.

g) Power Supply Circuitry

The 6360A has a new Switched Mode Power Supply circuit that replaces the functions of the +5V supply card and the +12V, -5V and -12V supply card used with the 6360 controller. This new supply is basically a 25W current mode, 100 kHz fixed frequency circuit employing variable duty cycle control.

The inner control loop has current feedback for fast response to transients, while the outer control loop has voltage feedback which is used to control the 5V supply. The main supply transformer has 5 secondary windings whose voltages are all 'slaved' to the 5V rail. These windings generate the following supplies:-

(i) A centre-tapped winding generates +15V and -15V to supply the analogue circuitry.

(ii) The main winding generates the +5V supply for the CPU, memory, front-panel and logic circuitry. This winding is zener protected and will cause the control circuit to 'trip and try again' if this voltage is exceeded.

(iii) A nominal 35V winding is used for the Transmitter Power Supply circuit.

(iv) A nominal 27V winding is used to power the 4-20mA Output Isolator circuit.

(v) The last winding generates two +15V supplies one of which is used to power the internal logic. The other supply is used for the 8 digital outputs but may be overridden by a higher external voltage applied to pin 7 of the Controller.

The Power Supply circuitry will go into foldback current limit and 'trip and try again' if the power level exceeds 25W. The necessary logic is also included to detect Power On and Power Failure conditions and alert the CPU accordingly.

h) Fuse

The Power Supply is provided with a 1A main fuse and a spare which are fitted along the top edge of the Motherboard instead of on a separate fuse board as for the 6360.

1.5 Technical Specification

1.5.3 Analogue Inputs

f) Sampling Rate : ADC samples 2 channels every 9 ms so that one channel is sampled once every 36 ms

g) Input Impedance : 1 Mohm pull-down to -3V on all channels (0-10V or 1-5V)

1.5.4 Analogue Outputs

h) Sample and hold : DAC updates 1 channel every 9 ms so that each channel is updated once every 36 ms

1.5.8 Power Supplies

b) Input current : 330mA without Hand-held terminal at 24V DC typical
: 410mA with Hand-held terminal at 24V DC typical

c) Input fuse rating : 1A

d) Internal supply rails :

Nominal Voltage	Voltage Tolerance	Power Limit
+15V analogue	±0.7V	The total output power is limited to 25W
+15V digital	±0.7V	
+15V logic O/P	±0.7V	
+5V	±10mV	
-15V analogue	±0.7V	

e) Power Failure Detect threshold : When input voltage falls below 16.5 ±2V

g) Memory Standby Battery characteristics : Lithium type
: 3.0V nominal output at 160 mAh
: 8-10 year shelf life typical
: 5 year life typical on continuous standby
: 20 minute holdup time minimum with battery board removed

1.5.10 Physical Specification

a) Mechanical

(iv) Weight : 1.2 kg

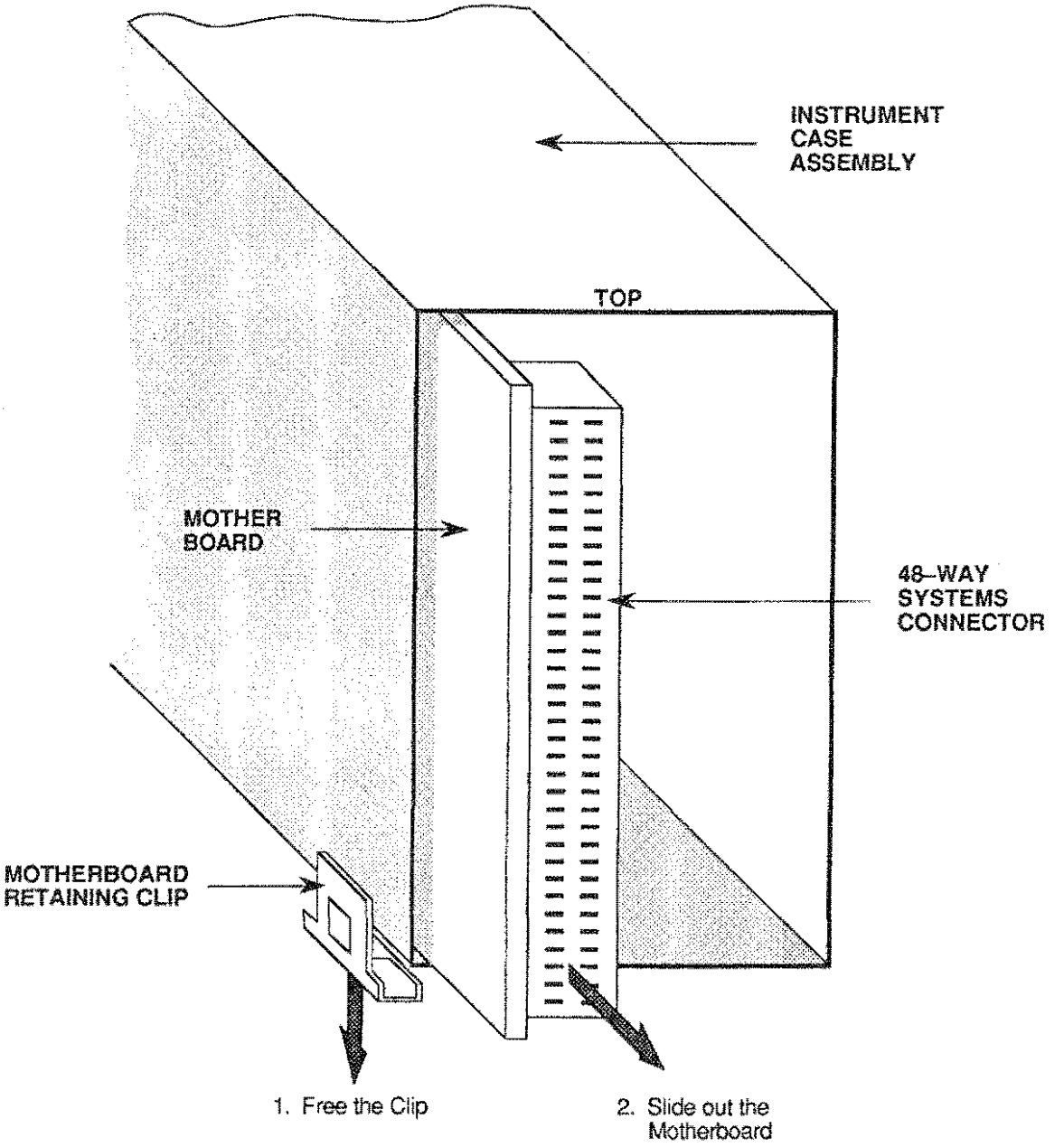

FIG. 2.1 REMOVAL OF INSTRUMENT FROM CASE ASSEMBLY

Section 2 INSTALLATION

2.1 General Requirements

As the 6360A is a direct plug-in equivalent of the 6360 the installation procedure is the same in every respect except for the settings of the internal switches. With the 6360 all of these switches are accessible through the top of the instrument case assembly. However, the 6360A has to be removed from its case before these internal switches can be accessed as they are positioned at the centre of the motherboard.

2.1.1 Accessing the Motherboard

The Motherboard is retained in the case assembly by means of a clip at the bottom left-hand corner when viewed from the rear of the instrument. This clip should be prised downwards about ¼" using a small screwdriver as shown in Fig. 2.1. The complete motherboard and Front panel assembly can now be slid out from the rear.

WARNING

Failure to take antistatic precautions when opening the instrument may result in damage to some of the components and ultimate failure of the instrument.

2.1.2 Instrument Re-assembly

Once the internal switches and jumpers have been set, the instrument assembly is slid back into the case from the rear. The motherboard should be pushed as far forward as possible to make sure that the Front-panel programming socket is protruding through the fascia cut out behind the protective plastic cover. The metal clip is then pushed upwards to lock the motherboard back into the case assembly.

FIG 2.2 PLAN VIEW OF 6360A MOTHERBOARD SHOWING INTERNAL SWITCH POSITIONS

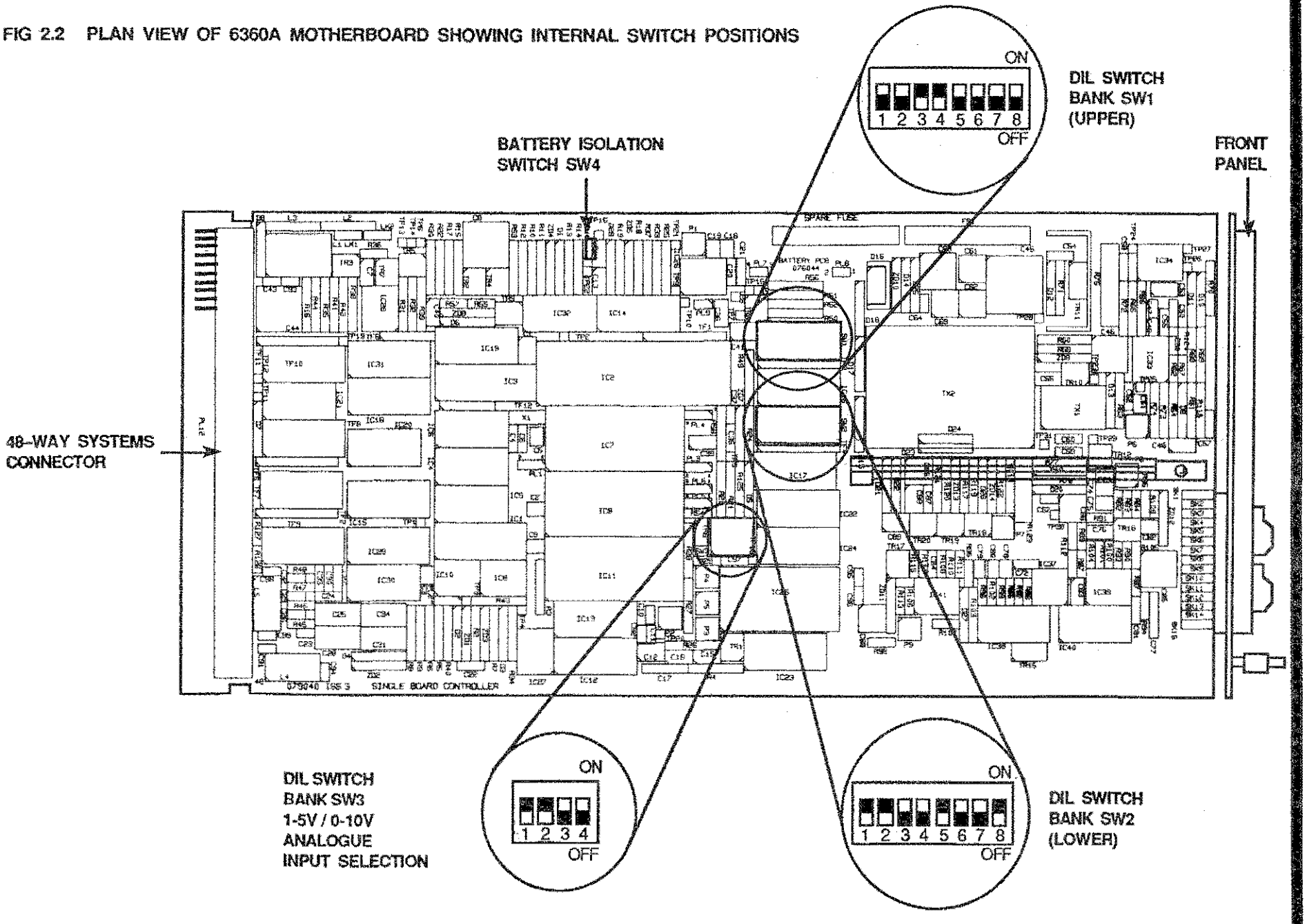

2.3 Internal Switch Settings

Fig. 2.2 is a plan view of the 6360A Process Controller looking sideways on to the motherboard with the Front panel to the right.

2.3.1 Battery Isolation Switch

This switch is designated SW1 on the 6360 and is situated on the MK.6 memory board. With the 6360A the Battery Isolation Switch is designated SW4 and is located along the top edge of the motherboard as shown in Fig. 2.2.

(Note that with all Issue 2 motherboards this switch is designated SW3.)

2.3.2 Internal Status Switches

The two internal switch banks S1 and S2 are situated along the top of the Digital Input/Output board on the 6360. With the 6360A these switches are designated SW1 and SW2 respectively and are situated near the centre of the motherboard close to the transformer as shown in Fig. 2.2. The functions assigned to each of the switches contained within SW1 and SW2 are listed in Table 2.1 and are the same as for the 6360.

(Note that with early issue 2 motherboards SW1 and SW2 are designated SW3 and SW4 respectively on the PCB silk-screen).

SWITCH BANK	SWITCH NUMBER	SWITCH ACTION ON (UP)	SWITCH ACTION OFF(DOWN)	SWITCH FUNCTION
SW2 LOWER	1	Ratio mode	Normal 3-Term	Ratio mode enable
	2	Inverted Display	Normal Display	Output display mode select
	3	Inverse Ratio	Normal Ratio	Inverse Ratio mode select
	4	Inverse output	Normal output	Inverse 3-term output select
	5	MANUAL O/P = LO	Previous mode	a) Return mode after power failure
		MANUAL O/P = LO	MANUAL O/P=prev.	b) Mode selected after open-circuit PV detected
	6	Tracks PV	Constant	Setpoint action when not in AUTO mode
	7	Deviation (Error)	Setpoint	Channel 3 output function select (pin 34)
	8	Minutes	Seconds	3-Term time constant range select (TI,TD)
SW1 UPPER	1	Disable Balance	Enable Balance	Integral term balance disable on Local Setpoint (SL) changes
	2, 3, 4	see	Table 2.2	Baud rate selection switches for RS422 data link
	5	Binary	ASCII	Protocol mode select
	6	4	0	2^2 — Instrument Group identifier (GID)
	7	2	0	2^1 — Instrument Group identifier (GID)
	8	1	0	2^0 — Instrument Group identifier (GID)

TABLE 2.1 Internal Switches SW3 and SW4 Functions

SWITCH BANK	SWITCH NUMBER			BAUD RATE	NUMBER OF STOP BITS
	2	3	4		
SW1	Off	Off	Off	110	2
	Off	Off	On	300	1
	Off	On	Off	600	1
	Off	On	On	1200	1
	On	Off	Off	2400	1
	On	Off	On	3600	1
	On	On	Off	4800	1
	On	On	On	9600	1

TABLE 2.2 RS422 Supervisory Serial Data Link Baud Rate Selections

SW3 BANK SWITCH NUMBER	PIN NO.	SWITCH ACTION					
		OFF			ON		
		SIGNAL FUNCTION	SIGNAL SENSE	VOLTAGE RANGE	SIGNAL FUNCTION	SIGNAL SENSE	VOLTAGE RANGE
1	10	N/A	-	-	Process Variable	Input	1-5V
	13	Process Variable	Input	0-10V	N/A	-	-
2	11	N/A	-	-	Remote Spt. /Ratio PV	Input	1-5V
	14	Remote/Ratio Setpoint	Input	0-10V	N/A	-	-
3	12	N/A	-	-	Trim/Track Meas. Power	Input	1-5V
	15	Trim/Track Meas. Power	Input	0-10V	N/A	-	-

TABLE 2.3 Analogue Input Voltage Selection Functions

2.3.3 Analogue Input Voltage Selection

The 6360 uses a separate DIL switch bank, S3, mounted on the Signal Conditioner card to determine which of the three analogue input channels have direct 0-10V inputs and which of them have 1-5V conditioned inputs. Section 1.4.2 d) explains how the 6360A does not have separate signal conditioning amplifiers but uses a 6-way analogue multiplexer instead. As for the 6360, the 1-5V inputs are connected to pins 10, 11 and 12 while the 0-10V inputs are connected to pins 13, 14 and 15 respectively. The first 3 switches of DIL switch SW3 are then used to determine whether the 1-5V or 0-10V signal should be used for each analogue input channel.

Fig. 2.2 shows the position of DIL switch SW3 on the motherboard, and Table 2.3 illustrates the effect of switches 1, 2 and 3 on the analogue inputs. It can be seen from Table 2.3 that with all 3 switches in the OFF position the signals on pins 13, 14 and 15 are used as 0-10V input channels 1, 2 and 3 respectively. When switches 1, 2 or 3 are set ON, the signals on pins 10, 11 and 12 are used as 1-5V input channels 1, 2 and 3 respectively.

0-10V Outputs

With the 6360 controller if a 1-5V input pin was being used then the corresponding 0-10V input pin could be used to provide a buffered 0-10V output from the Signal Conditioning amplifier. This facility is not available with the 6360A hardware as the analogue inputs pins function as inputs at all times irrespective of the operating voltage.

2.4 Plant and Other External Connections

2.4.2 Analogue Inputs

B) Non-isolated 4-20mA or 1-5V Inputs

As the 6360A does not use separate signal conditioning amplifiers, when 1-5V inputs have been selected pins 13, 14 or 15 are not available as buffered 0-10V outputs.

2.7 Jumper Plug Factory Setting

With the 6360 the internal Jumper Plugs are not usually accessible as the instrument is not removed from its case. The single-board construction of the 6360A, however, requires the instrument to be removed from the case so that the 3 banks of DIL switches may be set up. In the event of any of the other jumper plugs being accidentally moved, their correct factory settings are listed below for reference:-

JUMPER PLUG	FACTORY SETTING
PL1	1-2
PL2	2-3
PL3	2-3
PL4	1-2
PL5	Not fitted
PL6	Not fitted

Section 4 PROGRAMMING THE 6360A PROCESS CONTROLLER VIA THE 8260 HAND-HELD TERMINAL

The Command Parameter mnemonics of the 6360 and their functions are identical to the 6360A with the exception of the II parameter.

4.3 Status Word Parameters

4.3.1 II - Instrument Identity

For the 6360 with issue 2 software II returns the value 3602. As the 6360A is a plug compatible 6360 replacement it returns the same instrument identity. However, as the software is different internally the 6360A issue numbers start at 8 to avoid confusion. II therefore returns the value 3608 as shown below:-

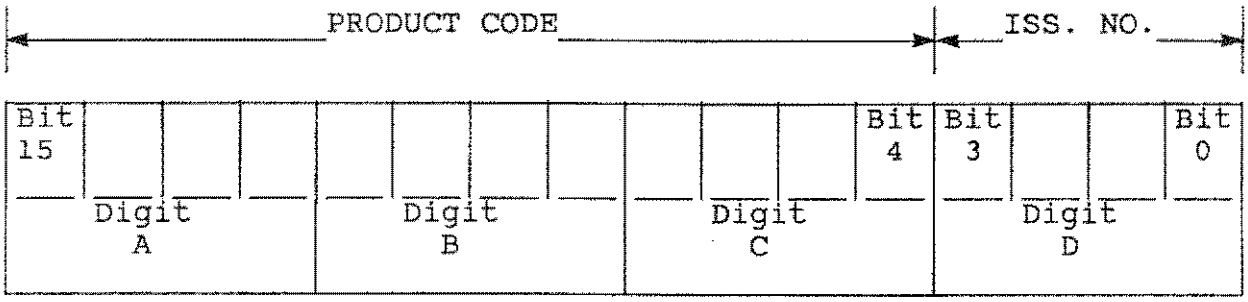

DIGIT	BIT	FUNCTION
A,B,C	15-4	Product Code (6) 360
D	3-0	Issue Number 8

Software part number :- RD 079664 issue 8, release 4

Table 4.1 lists the 2 character command parameters of the 6360A Process Controller used when accessing data via the 8260 Hand-held Terminal or the ASCII mode of the RS422 serial link protocol (see Section 5 of the System 6000 Communications Handbook). Table 5.1 lists the corresponding Parameter Numbers used with the Binary mode of the protocol (see Section 6 of the System 6000 Communications Handbook). The table below shows the modification history of the 6360A software with respect to changes in these parameter tables, and it should be noted that this software is identical to that used for the 6350A Process Controller:-

SOFTWARE		DATE	MEMORY OPTION	PROMS		REMARKS
ISS.	REL			TYPE	NO	
8	1	03/07/87	001	27C 256	1	Initial Release at issue 8
8	2	27/07/87	001	27C 256	1	Cure problem with analogue input noise
8	3	12/11/87	001	27C 256	1	Cure problem with integral wind-up
8	4	02/02/88	001	27C 256	1	As Issue 8/3 but runs on Issue 3 motherboard

TCS

7950 UNIVERSAL PACKAGING SYSTEM

REAR TERMINATION ASSEMBLY

TA6360

Identity

Rack No.

6360 BARGRAPH PROCESS CONTROLLER

Slot No.

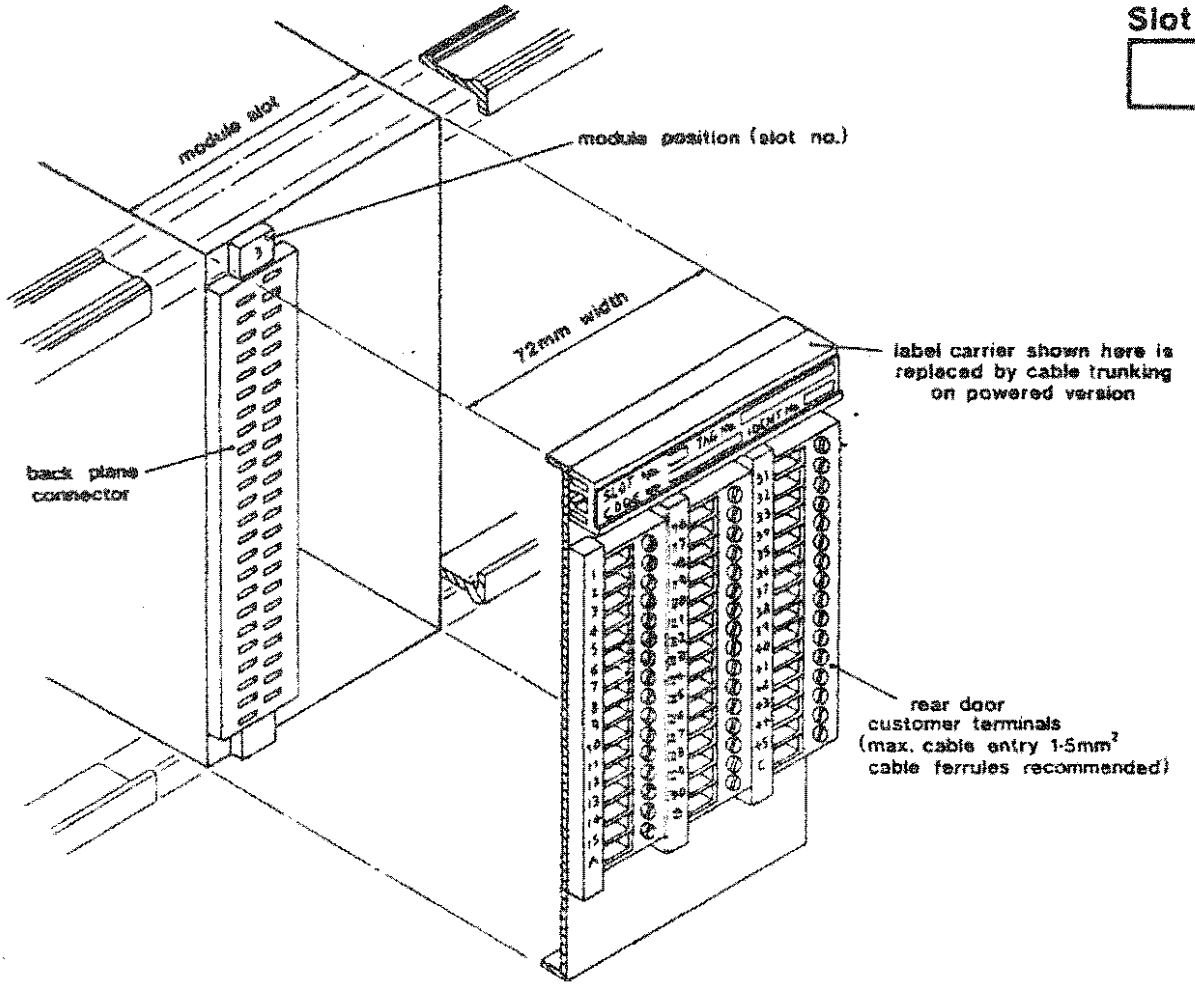

The TA6360 termination assembly consists of a 48 pin back-plane connector with a wire loom linking the module connections on the back-plane to three rows of 16 customer terminals. The assembly is used to mount 6360 Bargraph Process Controllers into the 7950 Universal Packaging System.

When the D option is specified, steering diodes are fitted between terminals A and B, and C and B as shown overleaf so that terminals A and C can be used for Main and Back-up supply inputs. Terminals B and 15 are then available as secure supply outputs for cabling back to associated I/O devices such as the TCS 'D Series' units.

When the B option is specified, 250 ohm burden resistors are fitted between terminals 1 and 16, 2 and 17, and 3 and 18 for the three 1 to 5V analogue inputs.

Detailed specifications can be found in the following documents :-

7950 Sales Literature
6360 Product Specification
6360 Technical Manual

Turnbull Control Systems Limited Telephone Worthing (0903) 205277

TA63BD

TERMINATION ASSEMBLY INTERCONNECTIONS

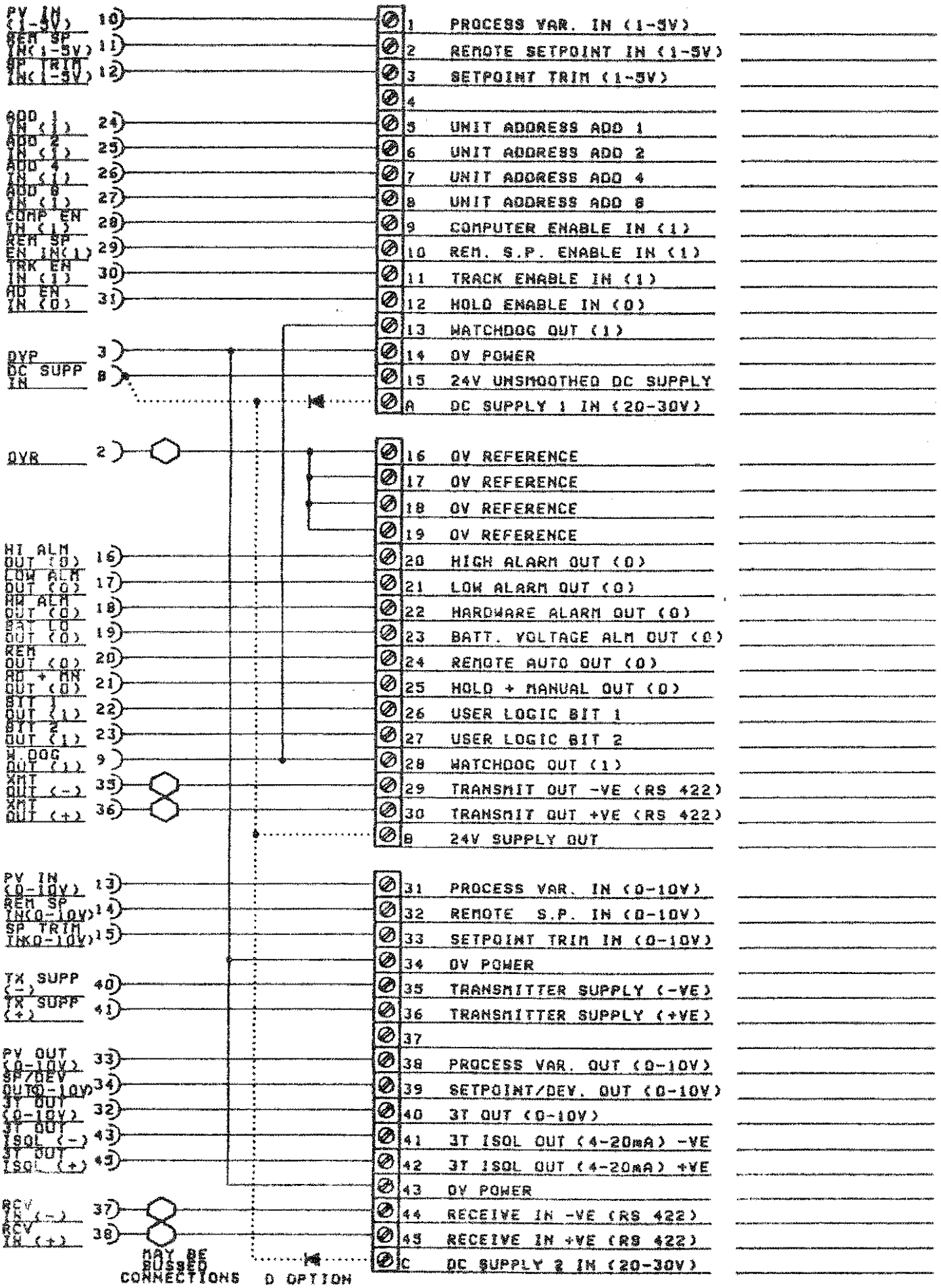

6360 - MICROPROCESSOR BASED PROCESS CONTROLLER

TECHNICAL MANUAL

Date : Jun. 86

Issue : 2; Rev. A

HBK

Part no: HA 075415 U003

Turnbull Control Systems Limited
Broadwater Trading Estate Worthing Sussex BN14 8NW

Telephone Worthing (0903)205277
Telex 87437

CONTENTS

LIST OF ILLUSTRATIONS

LIST OF TABLES

APPENDICES

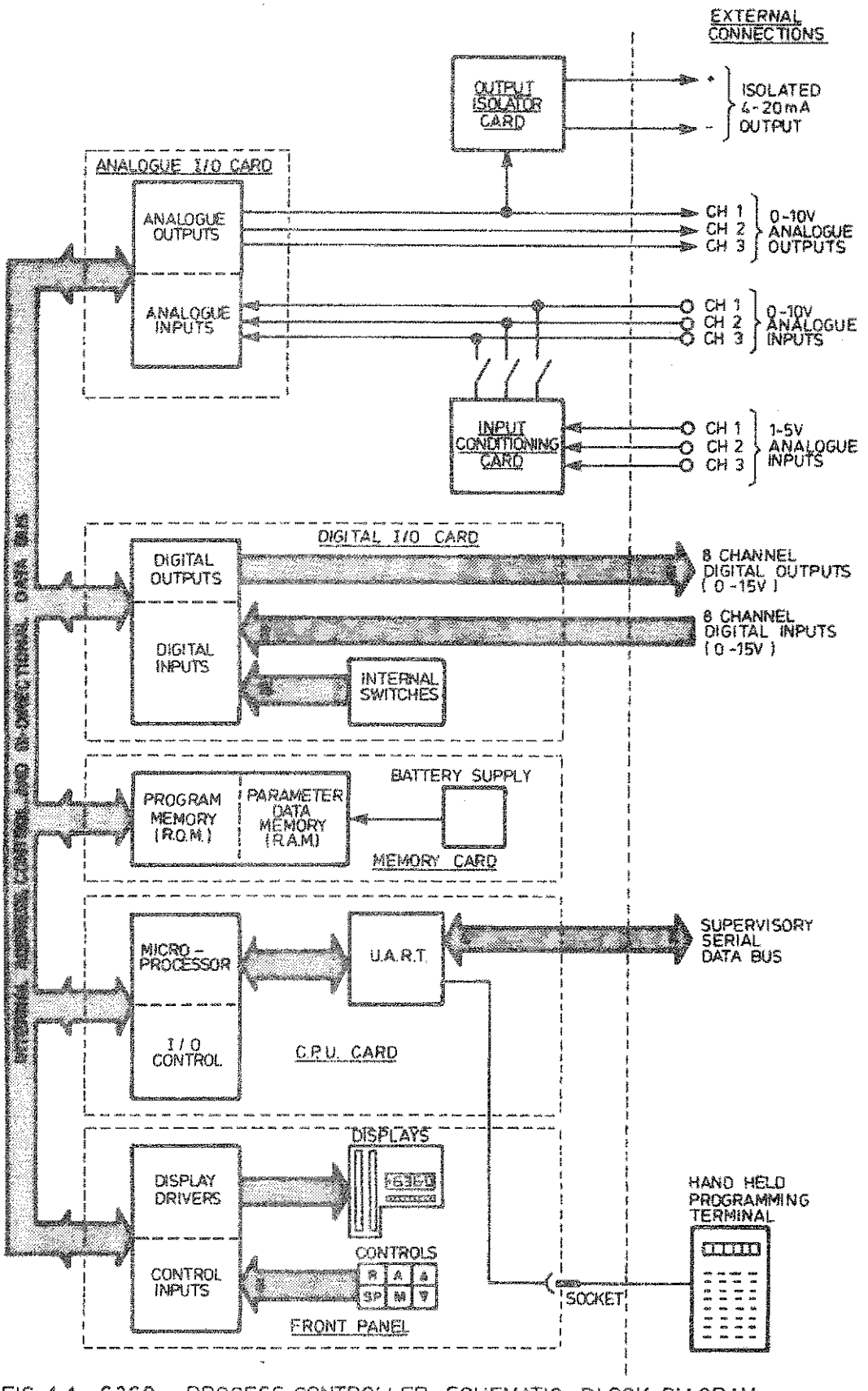

FIG. 1.1 6360 PROCESS CONTROLLER SCHEMATIC BLOCK DIAGRAM

Section 1 GENERAL DESCRIPTION

1.1 Introduction

The Model 6360 Microprocessor based single-loop Process Controller is fully compatible, both electrically and mechanically, with the Turnbull Control Systems Matric 6000 Range of modular control equipment.

As a Systems component it plugs directly into the model 7000 Rack unit or 7600 Bin unit for plant installation and integrates with the full capabilities of the range which includes modules for signal conditioning, actuator driving and centralised monitoring and control facilities.

The 6360 Process Controller is also available housed within a 72mm DIN compatible sleeve for front of panel mounting.

1.2 Features and General Description

The features of the 6360 Process Controller are best described with reference to the schematic Block Diagram shown in Fig 1.1. It can be seen that the hardware structure is such that each of the Controller functions, namely:-

Front Panel Displays and Operator Controls
Digital Input/Output signals
Analogue Input/Output signals

are implemented as separate hardware blocks. Each of these functional blocks communicates with the Central Processor Unit (CPU) which controls the overall operation of the unit via the internal communication busses shown. The CPU itself contains the microprocessor which is the intelligent "heart" of the device and it in turn has to communicate with a Memory block which stores the necessary set of control programs together with all the control parameters.

The Front Panel contains all the indicators and displays necessary to allow an operator to monitor a Process Control Loop. It also has a number of control push-buttons which allow the operator to interact with the Control Loop changing its mode from Manual to Automatic with local or remotely supplied setpoints and also to change the operating conditions within these control modes. A socket is provided on the front panel to allow an 8260 Hand-held programming terminal to be connected which is used to set up the control loop characteristics initially, or monitor and change any of the control parameters subsequently. Access to all the loop parameters for monitoring or updating purposes is also possible by means of a second communication channel available at the rear connector which is intended for computer supervisory use.

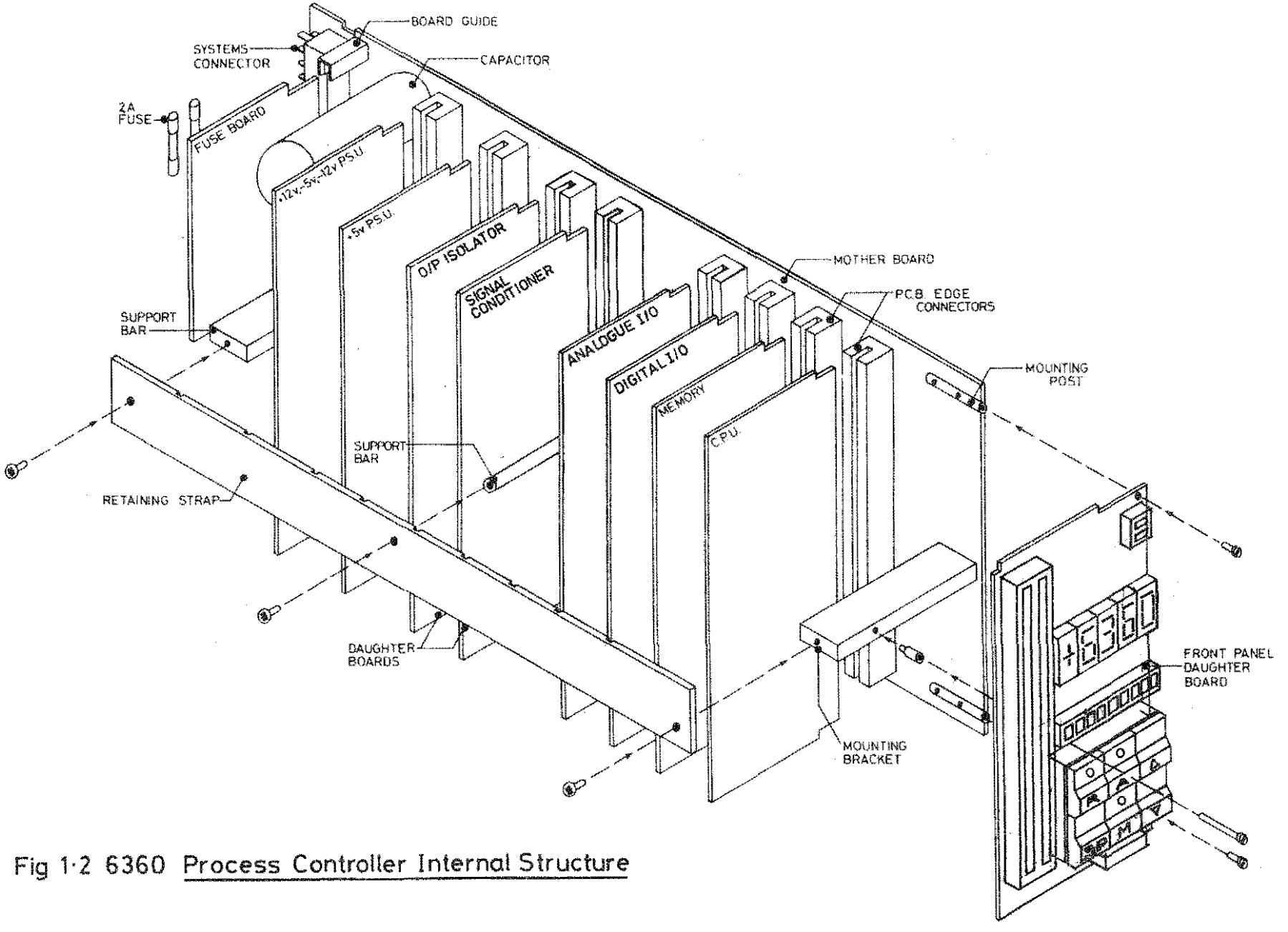

Fig 1·2 6360 Process Controller Internal Structure

The Digital outputs provide alarm and status information about the Controller via 8 logic signals. The Digital inputs are used to control the operation of the Controller via external logic signals when it is interacting with other Controllers in complex situations such as Cascade loops.

The Analogue inputs are used to monitor the plant Process Variable and receive external setpoints and trims. The Analogue outputs provide the necessary control signals to the Actuator drivers and also re-transmit the Process Variable and Setpoint or Error.

The Input Conditioning card may be utilised when the Analogue inputs are 1 - 5V signals. This card also provides a supply for powering external Transmitters.

The 3 - Term control output is available in two forms; namely a 0 - 10V non-isolated signal, and a 4 - 20mA isolated signal.

1.3 Mechanical Structure

The Mechanical Structure of the 6360 Process Controller is shown in Fig 1.2. Each of the functional blocks is implemented on a single printed-circuit board (pcb) which plugs into an interconnection or Mother board via pcb edge connectors. The Front-panel pcb is connected to the Mother board via a 15 way single-in-line connector and is secured via two retaining screws and a mounting pillar. All the other daughter boards plug into 48 way pcb edge connectors except for a small Fuse board at the rear of the module. This pcb carries the fuses and power supply protection circuitry and is connected directly to the Mother board via soldered "F" pins and is restrained by board guides. The large reservoir smoothing capacitor, C1, is mounted directly onto the Mother board.

The rear end of the Mother board (Assembly: AC 069488) incorporates polarising slots in connector positions 35, 39 and 47 to mate with polarising pegs fitted to the 48 way system connector housed within the 7950 Universal Racking System.

CONNECTOR NUMBER	CONNECTOR TYPE	DAUGHTER BOARD FUNCTION	POLARISING KEY POSITION
1	Double-sided	Central processor unit	39 - 40
2	Double-sided	Memory Mk 6 (010)	40 - 41
3	Single-sided	Digital input/output	43 - 44
4	Single-sided	Analogue input/output (1)	46 - 47
5	-	-	-
6	Single-sided	Input signal conditioner	5 - 6
7	Single-sided	Output isolator	33 - 34
8	Single-sided	+5V Power supply	25 - 26
9	Single-sided	±12V, -5V Power supply	14 - 15

TABLE 1.1 6360 Daughter Board Edge Connector Characteristics

The connectors for the other daughter boards are provided with polarising clips to ensure that the boards are always inserted in the correct order. The daughter board connector characteristics are listed in Table 1.1. The 8 daughter boards are firmly held in the Mother-board edge connectors by means of a retaining strap. This strap has lateral grooves for positive mating with each daughter board and is provided with three fixing screws. These are connected to the Front-panel mounting pillar, a mounting post next to the Signal Conditioner card and a mounting pillar next to the Fuse board.

The complete set of daughter boards and the Mother board slide into a 72mm case assembly which is fitted with a Front-panel fascia as illustrated in Fig 1.3. The fascia carries the cover for the 8260 Hand-held programming terminal socket and the metal catch-handle for module withdrawal. A metal clip is mounted at the rear of the sleeve to hold the Mother board assembly firmly in position.

1.3.1 Rack-Mounting Controllers

The 6360 Controller may be rack mounted in the standard TCS type 7000 racking system. A 19" rack will house up to 6 Controllers in their 72mm metal cases, and they can be mixed with other TCS Matric 6000 modules. A half width rack is also available, and this can hold up to 3 Controllers. Rack wiring is carried out in the conventional manner, and a rack-wiring schedule may be prepared from the 6360 rear connector pin chart given in Appendix A.

1.3.2 Bin-Mounting Controllers

The 6360 Controller may be mounted in the TCS 7600 Bin system, where the Controller pins are wired to customer screw terminals. The system can be configured by referring to the B6360 rear termination assembly given in Appendix B.

1.3.3 Panel-Mounting Controllers

The 6360 Controller can be used as a stand-alone panel-mounted instrument by using the 7900 single or multi-way sleeve assembly. In this case each instrument is provided with a 7360 rear termination assembly that contains the power supply, two alarm relays, and also gives access to all the instrument connections via screw terminals. Full data sheets on the 7900 sleeve unit and the 7360 rear termination assembly are provided in Appendix C.

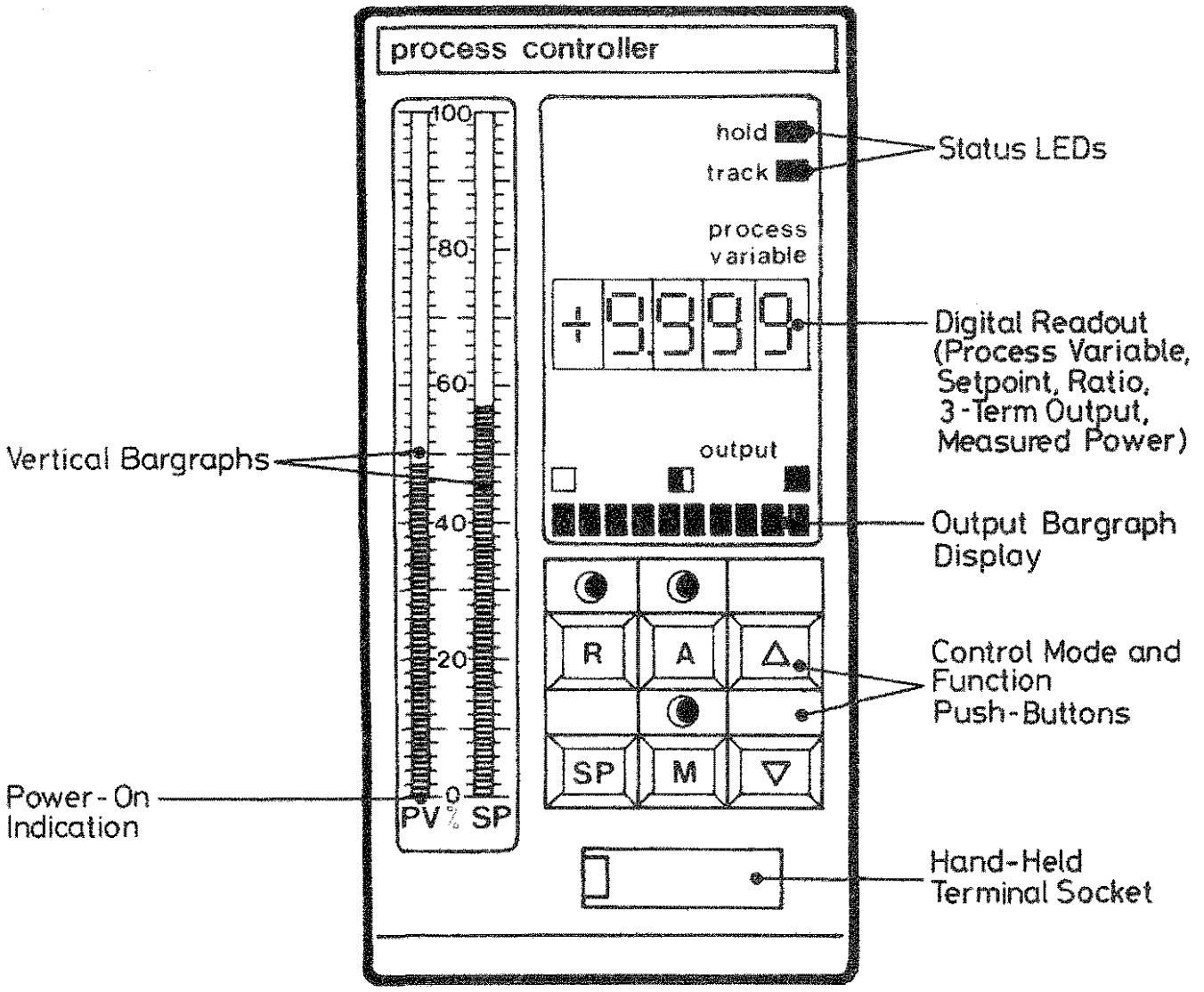

Fig 1.3 6360 Process Controller Fascia Diagram

1.4 Daughter Board Functional Descriptions

Each of the daughter boards are described in turn to indicate their function within the basic 6360 Process Controller.

1.4.1 Front-Panel Daughter Board (Assembly: AC 075225)

The Front-panel daughter board holds all the indicator and display components together with the Operator Control push-buttons. The display components can be seen from the fascia diagram of Fig. 1.3 and consist of the following:-

a) Vertical Bargraphs

Two 101 segment, red LED bargraph displays are provided and each has the bottom bar permanently lit to indicate power on. The remaining 100 segments indicate values of 0 - 100% in 1% steps. The left-hand bar displays the current Process Variable (PV) while the right-hand bar displays the Resultant Setpoint (SP). In the case of an alarm condition the PV bar is made to flash.

b) Digital Readout (Assembly : AC 075226)

A 4 digit, orange 7-segment LED display with a sign digit and programmable decimal point position is provided for Process Variable, Setpoint, 3-Term Output or Measured Power indication in the range - 9999 to +9999.

c) Output Display

A 10 segment, yellow LED horizontal bargraph is provided to indicate the 3-Term output from the Controller or the Measured Power from 0 to 100% in 10% steps.

d) Status LEDS

Two rectangular yellow LEDs are provided to indicate the TRACK and HOLD status of the Controller.

The 6 operator Control push-buttons are all of the momentary type and have the following functions:-

a) 3 Control Mode Push Buttons

These are the MANUAL (M), LOCAL AUTO (A), and REMOTE AUTO/RATIO (R) buttons which incorporate yellow, green and green LEDs respectively. These buttons select the actual operating mode of the Controller.

b) 2 Function Push-Buttons

These are the RAISE (▲) and LOWER (▼) push-buttons which are used in conjunction with the (M) and (SP) buttons to increase and decrease respectively the output level, Local Setpoint, or Ratio settings.

Pressing only the Raise (▲) or Lower (▼) buttons will cause the high or low alarm levels respectively to be flashed on the bargraphs. Absolute alarm levels are indicated on the PV bar, and deviation alarm levels are indicated on the SP bar.

c) Display Select Push-Buttons

Normally the digital readout displays the Process Variable but when the SETPOINT (SP) display button is pressed it shows the current setpoint or Ratio setting in RATIO mode.

The Daughter board contains all the drive electronics associated with these displays and push-buttons and also carries the 7 pin socket into which the 8260 Hand-held programming terminal may be plugged.

1.4.2 Central Processor Daughter Board (Assembly: AC 069932)

The CPU Daughter board contains the 16 bit microprocessor together with the associated support logic required for interrupt handling and for providing the necessary input/output decoding logic. A Universal Asynchronous Receiver Transmitter (UART) circuit and associated drivers are used to communicate with either the 8260 Hand-held programming terminal via the Front panel socket, or with a supervisory system via the rear connector serial data bus.

The CPU card also contains a Watchdog timer circuit which monitors the microprocessor input/output functions. Upon detection of a failure all the Analogue outputs are "frozen" and all Front panel displays are cleared except the bottom bar on each of the bargraph displays.

1.4.3 Memory Daughter Board (Assembly: AC 076042)

The Memory daughter board is used to store the actual Controller programs in Read-Only Memory (ROM) and also the Control Loop parameters and other variables are stored in non-volatile Random-Access Memory (RAM). The RAM chips are made non-volatile by means of a standby battery supply circuit which powers them when the main supply has failed or undergoes a transient failure. A long-life Lithium primary cell is used for this purpose and it may be isolated from the circuit, during long shelf storage periods, if required.

The Lithium battery is not soldered directly to the memory board itself but is fitted to a separate battery board (Assembly: AC 076044) which is connected to the memory board via two 2-way plugs and sockets. This plug-on battery board is held in place by a board restraining bracket.

When the battery board is disconnected to facilitate battery replacement, standby current to the CMOS RAM is supplied by a high value "Supercap" fitted to the Mk 6 memory board. This capacitor will maintain the RAM in its non-volatile state for a minimum period of 20 minutes while the battery board is being replaced.

The battery supply can be isolated from the RAM by switch SW1. This might be done to conserve battery life when the 6360 is to be left unpowered for any great length of time.

SW1 is pushed in to connect the battery and pulled out to isolate the battery from the RAM.

1.4.4 Digital Input/Output Daughter Board (Assembly: AC 066520)

This daughter board has provision for 8 external 0/15V logic level inputs via the rear connector for control mode selections such as HOLD and TRACK etc., and for providing a controller Unit Address via back-plane wiring. 16 internal switches are also provided on the board to set up digital inputs to characterise the Controller with certain control mode parameters. In addition the board provides 8 external 0/15V logic level outputs for indicating Controller modes and status such as HIGH or LOW alarms.

The use of 0 and 15V logic levels for external inputs and outputs allows the 6360 Process Controller to interface directly with other modules in the Matric 6000 range.

1.4.5 Analogue Input/Output Daughter Board (Assembly: AC 065517)

The Analogue Input/Output Daughter board contains the circuitry necessary to provide the 3 non-isolated 0-10V output channels, each of which incorporates a medium-term sample-and-hold output stage. The board accepts 3 non-isolated 0-10V input channels which are multiplexed before being converted into digital form for the CPU. In addition, circuitry is provided on the board which allows the CPU to measure the battery voltage under dynamic loading conditions.

This board also contains circuitry capable of detecting an open-circuit 0-10V Process Variable input, or a zero current Process Variable signal when using the Input Conditioning Card with a 4-20mA input.

1.4.6 Input Conditioning Daughter Board (Assembly: AC 068056)

This board contains 3 independent amplifier circuits that convert a 1-5V input signal to a 0-10V output signal. The 3 outputs are internally connected to the three 0-10V input channels of the Analogue Input/Output Daughter board via switch S3, and can also be monitored via the rear connector. Each input conditioning amplifier can be switched in or out of the circuit via S3 so allowing a mixture of 0-10V and 1-5V inputs to be applied to the 6360 Controller.

The board also contains an isolated Transmitter Power Supply which is available via the rear connector for powering remote 4-20mA transmitters.

1.4.7 Output Isolator Daughter Board (Assembly: AC 068119)

The 3-Term Control output of the Analogue Input/Output daughter board is internally connected as the 0-10V input to the Output Isolator. This board then converts this signal to a 4-20mA isolated output signal available on separate rear connector pins.

1.4.8 +5V Power Supply Daughter Board (Assembly: AC 066518)

This board basically consists of a switching regulator circuit which draws its power from a 20-30 volt smoothed unregulated input and can supply up to 2.5A before current limiting. The board also contains the necessary logic circuitry to detect Power On and Power Failure conditions and alert the CPU accordingly.

1.4.9 <u>+12V, -5V, -12V Power Supply Daughter Board</u>
(Assembly: AC 066519)

This board also draws its power from the 20-30 volt supply input and uses a monolithic regulator to produce the +12V supply rail. A -16V supply is also generated on the board by means of an inverting regulator circuit and the -12V and -5V supply rails are derived from this with two further monolithic regulators. All 3 of the regulators incorporate current limit and thermal shut-down facilities.

The board also generates 2 pairs of isolated, unregulated, supplies which are used for the Transmitter Power Supply on the Input Conditioning board and the isolated output supply on the Output Isolator board.

1.4.10 <u>Fuse Daughter Board</u> (Assembly: AC 076089)

This board is used to mount the main 2A supply fuse together with circuitry capable of blowing it in the event of any internal supply rail exceeding its voltage tolerance limit. A spare 2A fuse is also mounted on the board for convenience. The board incorporates special fuse clips which allow the mounting of 20mm or 1¼ inch fuses in either the active or spare fuse position.

1.5 Technical Specification

1.5.1 Operator displays

a) Vertical Bargraphs Process Variable (PV) on the left, Setpoint (SP) on the right.	:	Two 101 segment red LED bargraph displays (each with bottom bar always on) displaying Process Variable and Setpoint from 0 - 100% with resolution of 1%.
b) Digital Readout (for Setpoint, Process Variable, 3 Term Output, and Measured Power indication)	:	4 digit, orange LED display with sign and a decimal point that can be programmed to 4 positions:- ±.9999 or ±9.999 or ±99.99 or ±999.9 or none, i.e. ±9999
c) Alarm Indication	:	High or low alarms indicated by flashing the PV bargraph
d) 3-Term Output or Measured Power Display	:	Horizontal yellow LED bargraph with 10 segments to indicate 0-100% output in 10% steps.
e) Status Indicators	:	2 yellow rectangular LEDs to indicate TRACK and HOLD status.

1.5.2 Operator Controls

a) Control Mode Selections : 3 Momentary action illuminated push-buttons:-

(i) Manual (M) with integral yellow LED

(ii) Local Auto (A) with integral green LED

(iii) Remote Auto or Ratio (R) with integral green LED.

b) Function Selection : 2 Momentary action, non-illuminated push-buttons:

(i) Raise (▲) increases the 3-Term Output when Manual (M) is pressed, or the Setpoint or Ratio Setting when Setpoint display (SP) is pressed.

(ii) Lower (▼) decreases the 3-Term Output when Manual (M) is pressed, or the Setpoint or Ratio Setting when Setpoint display (SP) is pressed.

c) Display Selection : 1 momentary action, non-illuminated push button which causes the digital readout to display the current setpoint as long as it is pressed.

NOTE

Holding the Manual, Auto or Remote buttons pressed in will cause the digital readout to display the current 3-Term Control Output level or the Measured Power as 4 digit values in the range 0 to 99.99% or in engineering units respectively.

1.5.3 Analogue Inputs

a) Number of Channels	:	3 direct non-isolated inputs or 3 conditioned non-isolated inputs.
b) Channel Functions	:	Channel 1 = Process Variable input
	:	Channel 2 = Remote Setpoint/Ratio input
	:	Channel 3 = Setpoint Trim/ Track/Measured Power input.
c) Input Signal Levels	:	Direct inputs are 0-10V range
	:	Conditioned inputs are 1-5V. (Derived from 4-20mA across 250R Burden resistor.)
d) Resolution	:	12 bit binary ADC (.025%) applied to inputs.
	:	15 bit binary representation obtained after digital filtering and signal averaging giving resolution of 1 digit in ±9999.
e) Accuracy	:	±1 LSB max. over 0 to 50°C range for hardware. ±1 digit of reading for 0-4000 range. ±2 digits of reading for 0-8000 range. ±3 digits of reading for 0-9999 range. - after input filtering.
f) Sampling Rate	:	ADC samples 1 channel every 12ms, i.e. any one channel is sampled once every 36ms.
g) Input Impedance	:	1M ohm pull-down to -5V on Channel 1
	:	1M ohm pull-down to 0V on channels 2, 3
h) Input Signal Processing	:	Linear: normal or inverse;
	:	Normalised square root;
	:	Type J, K, T, S, R, E, B thermocouples;
	:	Platinum resistance thermometers;
	:	Up to 5 user specified linearisations;

1.5.4 Analogue Outputs

a) Number of Channels	:	3 direct non-isolated outputs plus 1 isolated output.
b) Channel Functions	:	Channel 1 = 3 Term Control output
	:	Channel 2 = Process Variable output
	:	Channel 3 = Setpoint Output or amplified Deviation (Error)
c) Output Signal Levels	:	Direct outputs are 0-10V range
	:	Isolated output is 4-20mA (Channel 1 only)
d) Output Circuit type	:	Medium-term analogue sample-and-hold circuits preceded by DAC
e) Output resolution	:	12 bit binary (.025%) giving minimum analogue voltage steps of 2.5mV
f) Accuracy, 0-10V Output	:	±1 LSB max over 0 to 50°C range
g) Isolated Output accuracy	:	±0.5% of full scale
h) Sample and Hold	:	DAC updates 1 channel every 12ms, i.e. any one channel is refreshed once every 36ms.
i) Output Drift Rate under Watchdog Failure Conditions	:	0.5mV/sec maximum (equivalent to 1% of full scale in 3 minutes)
j) Output Drive Capability	:	±5mA for direct voltage outputs
	:	0 to 12V for 4-20mA isolated output
k) Isolation Voltage	:	±50V minimum with respect to system ground

1.5.5 Digital Inputs

a) Number of Inputs : 8 non-isolated inputs

b) Input Functions :
Input 1 = unit address 1
Input 2 = unit address 2
Input 3 = unit address 4
Input 4 = unit address 8
Input 5 = computer enable
Input 6 = Remote Setpoint /Ratio enable
Input 7 = Track enable
Input 8 = Hold enable

c) Input Voltage Levels :
15V = logic one
0V = logic zero

d) Input Impedance : 100k ohm pulldown to 0V (gives 150uA logic one current).

1.5.6 Digital Outputs

a) Number of Outputs : 8 non-isolated outputs plus Watchdog

b) Output Functions :
Output 1 = High Alarm
Output 2 = Low Alarm
Output 3 = Hardware Alarm
Output 4 = Battery Voltage low
Output 5 = Remote Auto/ Ratio status
Output 6 = Hold + Manual status
Output 7 = User logic bit 1
Output 8 = User logic bit 2

c) Output Voltage Levels :
15V = logic one
0V = logic zero

d) Output Drive Capability : 2k2 open-collector pullup to +15V supply

: Maximum logic zero sink current = 16mA

1.5.7 3 Term Control and Setpoint Characteristics

a) Algorithm Sampling Period	:	36 msecs to 0.2 mins dependent upon Integral and Derivative times
b) Setpoint - range	:	low, high -9999 to +9999
- limits	:	low, high -9999 to +9999
c) Setpoint Trim Range	:	low, high -9999 to +9999 in Engineering units.
d) Alarm Limits		
- Deviation	:	low, high, 0 to 9999 with hysteresis of 0.5% of Setpoint span
- Absolute	:	low, high, -9999 to +9999 with hysteresis of 0.5% of Process Variable span
e) Input Filter Range (all inputs)	:	0 to 99.99 seconds (first order)
f) Input Signal Processing	:	One of 16 functions including square root and linearisations.
g) Control Output - range	:	0-99.99% = 0-10V or 4-20mA (3-Term only)
-limits	:	low, high 0 to 99.99%
-polarity	:	Inverse Output mode switch selectable.
- raise/lower rate in Manual	:	0 to 99.99% in 10 secs. with accelerating action.
h) Proportional Band range	:	0 to 999.9% (0 configures loop to be in ON/OFF control - see Section 3.13).
i) Integral Time Constant Range	:	0.04 to 99.99 secs or 0.01 to 99.99 minutes 0 = off
j) Derivative Time Constant Range	:	0.04 to 99.99 secs. or 0.01 to 99.99 minutes 0 = off

1.5.8 Power Supplies

a) Input Voltage : (May be unsmoothed, full-wave rectified AC)
: 20-30V DC recommended operating range.
: 19-35V DC absolute maximum input limits.

b) Input Current : 600mA without hand-held terminal at 28V DC
: 700mA with hand-held terminal at 28V DC.

c) Input Fuse Rating : 2A.

d) Internal Supply Rails :

Nominal Voltage	Voltage Tolerance	Current Limit
+12V	±0.5V	200mA
+ 5V	±0.25V	2.5A
- 5V	±0.2V	200mA
-12V	±0.5V	300mA

e) Power Failure Detect Threshold : when input voltage falls below 16.5 +0.5V.

f) Remote Transmitter Supply characteristics : 26V ±1.5V at 4mA output
: 30V ±0.5V at 20mA output
: ±50V minimum isolation with respect to system ground

g) Memory Standby Battery Characteristics : Lithium type.
: 3.0V nominal output at 160mAh.
: 8-10 year shelf life.
: 5 year life minimum on continuous standby.
: 20 minute holdup time minimum with battery board removed.

1.5.9 Communications

a) No. of Communication Channels	:	2 serial ports.
b) Type	:	Full duplex.
c) Functions	:	(A) Dedicated data link via the front panel used by the Hand-held Terminal.
	:	(B) Multi-drop data link via the rear connector used by a supervisory computer.

(A) Hand-Held Terminal Link

a) Transmission Standard	:	2 wire RS 232/V24 (±12V)
b) Data Rate	:	300 baud
c) Character Length	:	10 bits made up of:- 1 start + 7 data + 1 parity (even) + 1 stop

(B) Multi-Drop Supervisory Link

a) Transmission Standard	:	4 wire RS422 (0-5V)
b) Line Impedance	:	120-240 ohm twisted pair
c) Line Length	:	4000 ft max. (at 9600 baud)
d) No. of Instruments/Line	:	16
e) Data Rate	:	Selectable from 110, 300, 600, 1200, 2400, 3600, 4800, or 9600, baud
f) Character Length		
(i) ASCII mode - 110 Baud	:	11 bits made up of:- 1 start + 7 data + 1 parity (even) + 2 stop
(ii) ASCII mode - 300 to 9600 Baud	:	10 bits made up of:- 1 start + 7 data + 1 parity (even) + 1 stop
(iii) Binary mode - 110 Baud	:	12 bits made up of:- 1 start + 8 data + 1 parity (even) + 2 stop
(iv) Binary mode - 300 to 9600 Baud	:	11 bits made up of:- 1 start + 8 data + 1 parity (even) + 1 stop

1.5.10 Physical Specification

a) Mechanical

(i)	Width	:	72 mm
(ii)	Height	:	142 mm
(iii)	Depth	:	300 mm
(iv)	Weight	:	1.7 kg

b) Environmental

(i)	Operating temperature	:	0 to +50°C
(ii)	Storage temperature	:	-20 to +55°c
(iii)	Relative humidity	:	5 to 90% non condensing
(iv)	Ventilation	:	Rack or Bin mounted Controllers must have at least a 1U gap above and below the case for proper ventilation
		:	Sleeve mounted Controllers should be mounted as specified in the 7900 Sleeve data sheet (see Appendix C)

Section 2 INSTALLATION

2.1 General Requirements

The sequence of events for installing a 6360 Process Controller in a system should be as follows:-

a) Rack or Bin Systems

(i) Ensure that a 72mm slot, fitted with a 48 way connector and all the correct mounting hardware, is available in a TCS 7000 Rack or 7600 Bin (See sections 1.3.1 and 1.3.2).

(ii) Ensure that an appropriate 24V DC supply is available and has been wired to the slot in the manner outlined in the System 6000 Installation Guide Section 5.

b) Self-Powered Sleeves

(i) Ensure that a 7900/7360 Self-Powered Sleeve is available (See Section 1.3.3).

(ii) Ensure that the 7900/7360 Self-Powered Sleeve has been correctly wired to either a 110/240V AC mains supply or a 24V DC supply (See Appendix C).

c) Before sliding the instrument into the rack, Bin or 7900/7360 sleeve check that all the internal switches have been set correctly as outlined in Section 2.3

d) Check that all the plant connections and other external inputs have been implemented correctly and that the signals are at the right levels as outlined in Section 2.4.

e) Power up the instrument in the manner outlined in Section 2.5.

f) The instrument can now be programmed with the Control Loop parameters following the instructions given in Section 4.

g) Once the Controller has been loaded with these parameters it can be operated in the various modes and control loop configurations as described in Section 3.

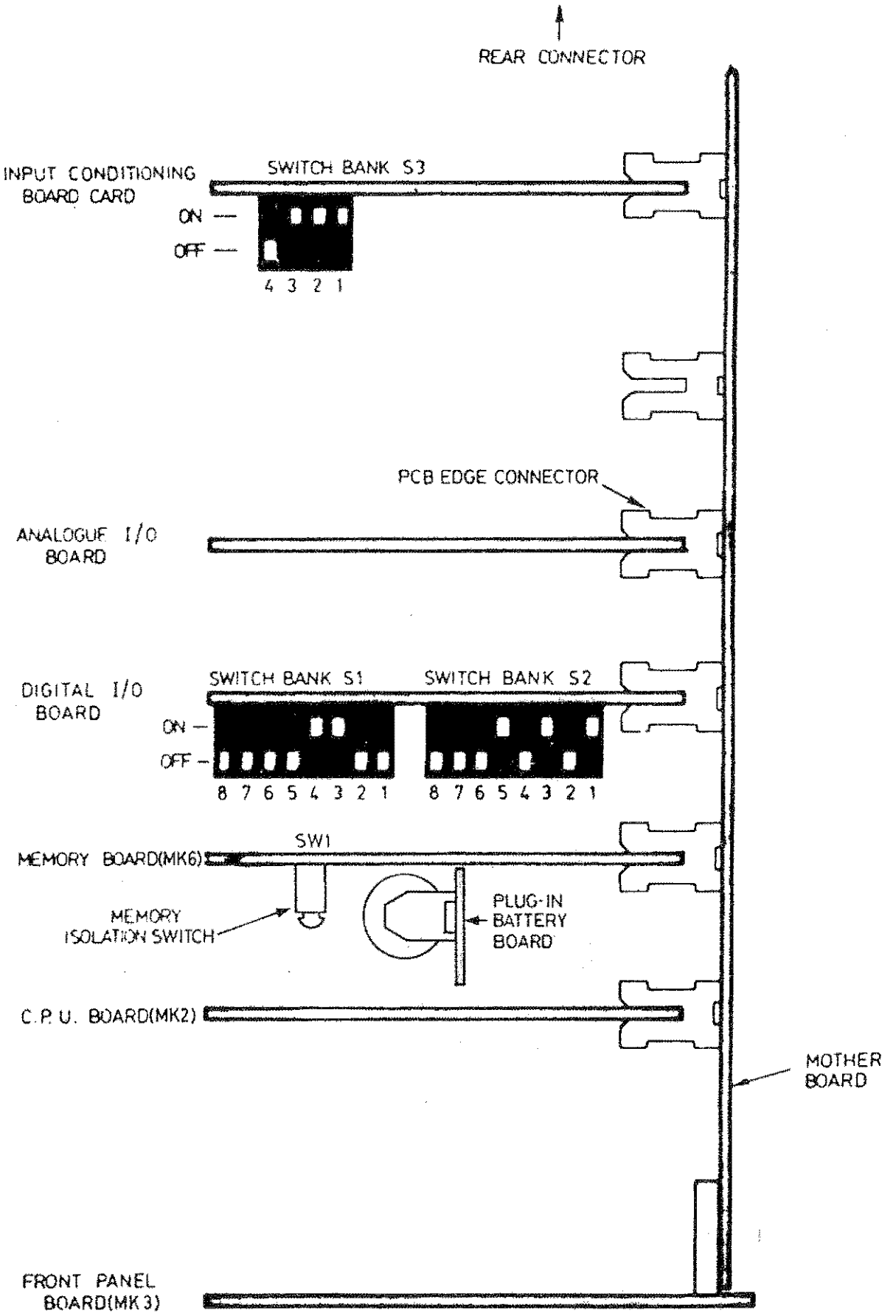

FIG 2-1 TOP VIEW OF CONTROLLER SHOWING INTERNAL SWITCH POSITIONS

2.2 Power Supply Connections

For a description of Power Supply connections including discussions of:

Basic Ground connections,
Connection of Separate 24V DC supplies,
Common Parallel Supply configuration,
Combination supply configuration
and External Ground connections

refer to the System 6000 Installation Guide Section 5.

2.3 Internal Switch Settings

Fig 2.1 is a view of the 6360 Process Controller looking down at the top of the sleeve and illustrates the relative positions of the various daughter boards and their associated internal switches.

2.3.1 Memory Isolation Switch

This switch, SW 1, is situated on the Mk 6 Memory daughter board and its function is to isolate the CMOS parameter memory from the standby battery supply. In normal operation this switch should always be pushed in to ensure that all the instrument parameters are stored safely when the external power supply is interrupted for any reason. When power is re-established the instrument will continue operation using the last set of stored parameters.

If the instrument is to be stored or left un-powered for any length of time without parameters programmed into the memory, then the switch can be pulled out to avoid draining the standby battery. It should be checked carefully that the switch has been pushed in before attempting to power up the instrument and start entering parameters. Note that whenever this switch is pulled out, all stored parameters will be stored for a minimum period of 20 minutes after which they will be lost. This storage period is to enable easy replacement of the plug-in battery board. (see Section 1.4.3).

2.3.2 Digital Input/Output Board Internal Status Switches

Fig 2.1 shows that the Digital Input/Output daughter board carries two 8 way DIL switches situated along the top edge. These two switch banks S1 and S2 are used for setting up various internal functions within the 6360 Process Controller to characterise it for a specific control system application. The functions assigned to each of the switches contained within S1 and S2 are listed in Table 2.1 and are detailed overleaf.

SWITCH BANK	SWITCH NUMBER	SWITCH ACTION ON (UP)	SWITCH ACTION OFF(DOWN)	SWITCH FUNCTION
S2 RIGHT	1	Ratio mode	Normal 3-Term	Ratio mode enable
	2	Inverted Display	Normal Display	Output display mode select
	3	Inverse Ratio	Normal Ratio	Inverse Ratio mode select
	4	Inverse output	Normal output	Inverse 3-term output select
	5	MANUAL O/P = LO	Previous mode	a) Return mode after power failure
		MANUAL O/P = LO	MANUAL O/P=prev.	b) Mode selected after open-circuit PV detected
	6	Tracks PV	Constant	Setpoint action when not in AUTO mode
	7	Deviation (Error)	Setpoint	Channel 3 output function select (pin 34)
	8	Minutes	Seconds	3-Term time constant range select (TI,TD)
S1 LEFT	1	Disable Balance	Enable Balance	Integral term balance disable on Local Setpoint (SL) changes
	2 3 4	see	Table 2.2	Baud rate selection switches for RS422 data link
	5	Binary	ASCII	Protocol mode select
	6	4	0	2^2 Instrument Group identifier (GID)
	7	2	0	2^1 Instrument Group identifier (GID)
	8	1	0	2^0 Instrument Group identifier (GID)

TABLE 2.1 Digital I/O Board internal switches S1 and S2 functions

NOTE: The functions of some of the switches are related to the use of the supervisory serial data link. Remote supervision and monitoring of TCS microprocessor-based instruments by an external intelligent device is discussed fully in Section 4 of the System 6000 Communications Manual.

a) Switch Bank S1 Functions

Most of the switches on this bank are used to set up the RS422 supervisory data link as follows:-

(i) Switch no. 1

This switch disables the balancing of the integral term on Local Setpoint (SL) changes:-

S1 no. 1 OFF = balancing enabled
S1 no. 1 ON = balancing disabled

(ii) Switches no. 2, 3, and 4

These switches select the baud rate at which the RS422 data link operates. The 8 possible data rates are 110, 300, 600, 1200, 2400, 3600, 4800, and 9600 bauds and the required switch settings to obtain them are given in Table 2.2.

(iii) Switch no. 5

This switch selects the operating mode of the serial link communications protocol thus:-

S1 no. 5 OFF = ASCII mode protocol
S1 no. 5 ON = Binary mode protocol

NOTE: All instruments on the RS422 data link must use the same protocol mode.

(iv) Switches no. 6, 7, and 8

In a large Supervisory Control system many System 6000 instruments may be connected to the central computer via a single serial data link. In such a configuration each instrument must have a unique identity so that when the computer sends a message to a particular instrument, only the unit with that identity will reply. The 6360 hardware allows up to 128 separate units to be uniquely identified via a 7 bit binary address. The 4 least-significant bits of this address are called the Unit identifier (UID) and are selected via back-plane wiring, described in Section 2.4.4 a). The 3 most-significant bits are called the Group Identifier (GID) and are selected by means of switches 6, 7 and 8 of switch bank S1. Table 2.1 shows that the binary weighting of each switch is as follows:-

SWITCH BANK	SWITCH NUMBER			BAUD RATE	NUMBER OF STOP BITS
	2	3	4		
1	Off	Off	Off	110	2
	Off	Off	On	300	1
	Off	On	Off	600	1
	Off	On	On	1200	1
	On	Off	Off	2400	1
	On	Off	On	3600	1
	On	On	Off	4800	1
	On	On	On	9600	1

TABLE 2.2 RS422 Supervisory Serial Data Link Baud Rate Selections

S1 no. 8 = 1
S1 no. 7 = 2 } when in the "ON" position.
S1 no. 6 = 4

Thus these 3 switches can be used to select a Group Identifier from 0 - 7.

b) Switch Bank S2 Functions

The switches on this bank are used to set up internal operating modes within the 6360 Controller as follows:-

(i) Switch no. 1

This switch is set when it is required to operate the 6360 as a Ratio Controller, otherwise it behaves as a conventional 3-Term Controller (see Section 3.7).

(ii) Switch no. 2

Switch no. 2 of switch bank S2 is used to provide the facility of Output Display Inversion. This function applies both to the display of the Controller Output, OP, on the horizontal bargraph, and to the display on the 4 digit readout whenever the M, A or R buttons are pressed. The action of S2 no. 2 is as follows:-

S2 no. 2 OFF = Normal display

e.g. if electrical output is at 60% of maximum, then OP reads as 60%.

S2 no. 2 ON = Inverted display

e.g. if electrical output is at 60% of maximum, then OP reads as 40%.

This facility does not affect the control process, only the output display. Indeed, S2 no. 2 can even be altered while in closed-loop control without any effect on the process.

Note

With the Output Display Inversion switch ON, the Raise and Lower push-buttons affect the displayed value. Pressing Raise and M raises the displayed output value and lowers the electrical output. Similarly error conditions that cause the electrical output to fall to a minimum, will result in OP being set to HO.

(iii) Switch no. 3

When switch no. 1 of switch bank S2 is ON so that the 6360 operates as a Ratio Controller, then switch no. 3 can be used to select the Normal or Inverse Ratio mode. The effect the Inverse Ratio mode has on the Ratio Setpoint and the Controller operation is discussed in Section 3.7.3 d).

(iv) Switch no. 4

This switch determines whether the Controller 3-Term output (pin 32) is in the Normal or Inverse operating mode. In the Normal mode (switch OFF) the 3-Term output moves towards full scale (100% or 10V) to counteract a negative-going Process Variable, i.e. typically when the Setpoint is greater than the Process Variable. In the Inverse mode (switch ON) the reverse occurs and the 3-Term output moves towards zero to counteract a negative-going Process Variable. It should be noted that the Output Bargraph and Digital readout will always indicate the actual Output as a percentage regardless of the setting of switch no. 4. (Except where Output Display Inversion is selected - see (ii) above).

Note

The sense of Normal and Inverse output may not conform to conventions adopted by other manufacturers.

(v) Switch no. 5

This switch is used to select which mode the 6360 Controller will operate in after a power failure or the detection of an open-circuit Process Variable input as follows :-

A) Return mode after power failure

Normally, after an input power failure the 6360 will resume operation in the same control mode and using the same loop parameters as were current before the failure occurred (see Section 2.5.2). However, in certain applications it would be a requirement that the Controller always reverts to the Manual Mode after a power failure regardless of the previous operating mode. Consequently, switch no. 5 can be used to select the Controller operation after power failure as follows:-

S2 no. 5 - OFF

In this case the Controller resumes operation in the mode in which it was operating just prior to the power failure.

S2 no. 5 - ON

In this case the Controller always resumes operation in the MANUAL mode with the controller electrical output (pin 32) set to the Low Limit. Where output display inversion is not selected, this results in OP being set to LO. Where output display inversion is selected this results in OP being set to HO.

B) Mode selected after open-circuit PV detection

Switch 5 is also used to select the action the Controller takes upon detecting an openn-circuit or zero current Process Variable input (see Section 2.6.3). Once this condition has been detected the 6360 will enter the FORCED MANUAL Mode with the Manual LED flashing to indicate the faulty input. If the Controller was operating in the AUTO, REMOTE AUTO or RATIO modes when the fault occurred, the subsequent control action can be selected as follows:-

S2 no. 5 - OFF

In this case the 3-Term Control output will remain at the last calculated level prior to the fault condition occurring.

S2 no. 5 - ON

In this case the Controller electrical Output (pin 32) will be set to the lower limit. Where output display inversion is not selected, this results in OP being set to LO. Where output display inversion is selected, this results in OP being set to HO.

For the Controller action if it was in HOLD, TRACK or MANUAL prior to the fault occurring refer to Section 2.6.3.

Note that when the Controller is in this FORCED MANUAL operating condition all the operating characteristics of Section 3.3.2 and 3.3.3 still apply e.g. the Output can be raised or lowered and so can the Local Setpoint. The only difference is that it is not possible to select any other operating mode via the Front-panel push-buttons until the open-circuit input condition has been corrected.

S3 BANK SWITCH NUMBER	PIN NO.	SWITCH ACTION					
		OFF			ON		
		SIGNAL FUNCTION	SIGNAL SENSE	VOLTAGE RANGE	SIGNAL FUNCTION	SIGNAL SENSE	VOLTAGE RANGE
1	10	N/A	-	-	Process Variable	Input	1-5V
	13	Process Variable	Input	0-10V	Process Variable	Output	0-10V
2	11	N/A	-	-	Remote Spt. /Ratio PV	Input	1-5V
	14	Remote/Ratio Setpoint	Input	0-10V	Remote/Spt. /Ratio PV	Output	0-10V
3	12	N/A	-	-	Trim/Track Meas. Power	Input	1-5V
	15	Trim/Track Meas. Power	Input	0-10V	Trim/Track Meas. Power	Output	0-10V

TABLE 2.3 Switch Bank S3 Selection Functions

(vi) Switch No. 6

This switch is used to determine what happens to the Local Setpoint value when the controller is not operating in the Local or Remote Auto Modes. When the switch is OFF the Setpoint remains constant, while if the switch is ON the Setpoint will track the Process Variable input thus ensuring no change in the Control Output level upon subsequent return to the Auto modes.

(vii) Switch No. 7

This switch is used to select whether the Channel 3 analogue Output (pin 34) is used to re-transmit the Resultant Setpoint or the Amplified Error as a 0-10V signal. When the switch is OFF channel 3 outputs the Setpoint and when it is ON channel 3 outputs the Error signal as described in Section 2.4.3 c).

(viii) Switch No. 8

This switch determines whether the Integral and Derivative Time constants are ranged in seconds or minutes. When the switch is OFF the seconds mode is selected and when it is ON the minutes mode is selected. (See Section 4.6.4)

2.3.3 Input Conditioning Daughter Board Switches

It can be seen from Figure 2.5 that the Input Conditioning daughter board has a third 4-way DIL switch bank, S3, available along its top edge. Three of the switches in S3 are used to individually select which of the three analogue input channels have direct 0-10V inputs and which of them have 1-5V conditioned inputs. The effect of the three switches is illustrated in Table 2.3.

It can be seen from Table 2.3 that with all 3 switches in the OFF position, the direct 0-10V analogue inputs can be connected directly to pins 13, 14 and 15 as described in Section 2.4.2 A). When switches 1, 2 or 3 are set ON, the 1-5V conditioned inputs are connected to pins 10, 11 and 12 while pins 13, 14 and 15 then serve as 0-10V output signals respectively. (See Section 2.4.2 B)). The remaining switch of switch bank S3, namely number 4 is not used and can be left in either position.

It should be noted that the settings of switch bank S3 can not be accessed via the 8260 Hand-held terminal or serial data link using the SW status word of Section 4.3.4.

2.4 Plant and Other External Connections

Appendix A lists the functions of the rear connector pins of the 6360 Process Controller. For correct operation of the instrument in a system it is necessary that external plant and equipment is connected up to it in the following manner.

2.4.1 Power Supplies

Connection of the 0V ref., 0V power and +24V supply rails of pins 2, 3 and 8 respectively are fully dealt with in the System 6000 Installation Guide Section 5.

2.4.2 Analogue Inputs

The Controller has 3 separate analogue input channels which are allocated to the following functions:-

a) Channel 1 (Pin 10: 1-5V; Pin 13: 0-10V)

Channel 1 is the Process Variable (Measured Value) input and has the same range as the Setpoint. Circuitry is provided which will detect when the 0-10V input goes open-circuit, or when zero-current is applied to the 1-5V inputs via external burden resistors. Under these conditions the Control action will be as described in Section 2.6.3.

b) Channel 2 (Pin 11: 1-5V; Pin 14: 0-10V)

Channel 2 is allocated to one of the following two functions depending upon whether the 6360 is acting as a Ratio Controller or not.

(i) S2 no. 1 - OFF

Section 2.3.2 b) (i) shows that with S2 no. 1 OFF the 6360 is configured as a conventional 3-Term Controller. In this mode Channel 2 is used for an External (Remote) analogue Setpoint input when this facility is required as described in Section 3.6.

(ii) S2 no. 1 - ON

Section 2.3.2 b) (i) shows that with S2 no. 1 ON the 6360 is configured as a Ratio Controller. In this mode Channel 2 is used for the Ratio Process Variable input from the Primary loop Controller as described in Section 3.7.

c) Channel 3 (Pin 12: 1-5V; Pin 15: 0-10V)

Channel 3 is allocated to one of the following four functions depending upon the 6360 operating mode and the settings of switch no. 1 of switch bank S2 and bit 4 of parameter MD.

(i) TRACK mode operation

When the TRACK ENABLE logic input, pin 30, is at 15V the 6360 Controller is operating in the TRACK mode as described in Section 3.2. Under these conditions, the 3-Term output, pin 32, is forced to follow the signal applied to the Channel 3 input without filtering or input channel processing. See Section 3.2.2 a).

(ii) S2 no. 1 - OFF, MD bit 4 LOW

Under these conditions the 6360 is operating as a conventional 3-Term controller and the signal applied to the Channel 3 input is used to trim the Local or Remote Setpoint as described in Section 3.11.1.

(iii) S2 no. 1 - ON, MD bit 4 LOW

Under these conditions the 6360 is operating as a Ratio Controller so the signal applied to the Channel 3 input is used to trim the Ratio Setting, RS, as described in Section 3.11.2.

(iv) MD bit 4 HIGH

Regardless of the setting of S2 no. 1, if MD bit 4 is set high then the Controller is displaying the Measured Power signal, MP, applied to the Channel 3 input as described in Section 3.10.

These 3 channels are available as two separate sets of input pins as follows:-

A) Non-Isolated 0-10V Inputs

When the Controller is used with other Matric 6000 series modules, which have a standard 0-10V output range, then these may be connected directly to the 0-10V Controller input pins. In this case the Input Channels use the following pins on the rear connector respectively:-

Input Channel	0-10V Connector Pin
Channel 1	13
Channel 2	14
Channel 3	15

B) Non-Isolated 4-20mA or 1-5V Inputs

When the Controller is used with external transmitters producing 4-20mA outputs these first have to be converted to 1-5V signals by means of external precision resistors. The 1-5V signals can then be applied to the 3 channel Analogue Input Conditioning card via the following rear connector pins:-

Input Channel	1-5V Connector Pin
Channel 1	10
Channel 2	11
Channel 3	12

The Input conditioning card has 3 independent amplifier circuits that convert a 1-5V input signal to a 0-10V output signal. These 3 outputs are internally connected to pins 13, 14 and 15 which are the 0-10V input pins described above. Thus when the conditioning card inputs are being used, the 3 channels can be monitored as buffered 0-10V signals on pins 13, 14 and 15 respectively. Each input conditioning amplifier can be switched in or out of the circuit as described in Section 2.3.3 thus allowing a mixture of 0-10V and 1-5V inputs.

Methods of connecting 4-20mA signals to the 6360 Controller and the use of the Transmitter supply are discussed more fully in Section 6 of the System 6000 Installation Guide.

2.4.3 Analogue Outputs

The Controller has 3 separate analogue output channels which are allocated to the following functions:-

a) Channel 1, pin 32, is the 3-Term Control output level which is a 0-10V signal representing 0-100% of full scale output.

If the Channel 1 3-Term control output is required in isolated form, then this signal is available from the Output Isolator daughter board. This card takes the signal on connector pin 32 as a 0-10V input and converts it to a 4-20mA isolated output. The positive and negative current outputs are available on connector pins 45 and 43 respectively and an accuracy of +0.5% of full scale is maintained with an isolation of +50V minimum with respect to system ground.

b) Channel 2, pin 33, is the re-transmitted version of the Process Variable input after it has been filtered and had any signal processing applied as described in Section 4.8.4. It is a 0-10V output signal.

c) Channel 3, pin 34, may be selected by means of switch no. 7 of switch bank S2 to output either of two signals as follows:-

(i) S2 no. 7 - OFF

Section 2.3.2 b) (vii) shows that with S2 no. 7 OFF, then this output is the re-transmitted version of the Setpoint. It is in fact the Resultant Setpoint, SP (See Section 4.8.3), as actually applied to the 3-Term Control Algorithm and is the Local or Remote value with or without Trim. The output is a 0-10V signal.

(ii) S2 no. 7 - ON

Section 2.3.2 b) (vii) shows that with S2 no. 7 ON, then this output is a re-transmitted version of the Error signal ER of Section 4.8.5. In fact the output in this mode represents the spanned error, amplified by eight, centered about a 5V datum thus:-

$$\text{ERROR SIGNAL(V)} = \frac{8 \times \text{ERROR} \times \text{ERROR RANGE}}{\text{SETPOINT SPAN}} + 5\text{V}$$

$$= \frac{8 \times (\text{PV}-\text{SP}) \times 10\text{V}}{(1\text{H}-1\text{L})} + 5\text{V}$$

N.B. Error signals are clipped to the range of 0 to 10V. i.e.:-

Span of error output = $\frac{1}{8}$ x span of Process Variable.

2.4.4 Digital Inputs

The Controller is provided with 8 digital inputs for use with 0-15V logic levels which occupy pins 24 to 31 inclusive of the rear connector as can be seen from Appendix A. Each of the Digital Inputs is fitted with a 100k ohm pull-down resistor to 0V so that the maximum input current required to maintain a logic 1 is 0.15mA. The functions of the inputs are as follows:-

a) Inputs 1 to 4 (pins 24 to 27 inclusive - ADD.1 to ADD.4.IN(1))

These 4 inputs are connected to logic ones or zeros via back-plane wiring which is used to provide a unique slot address. This slot address forms the 4 least-significant bits of the 7 bit binary Address discussed in Section 2.3.2 a) (iv) and is called the Unit Address Identifier (UID). The binary weighting of each input is as follows:-

Input 1 (pin 24) = 1
Input 2 (pin 25) = 2
Input 3 (pin 26) = 4
Input 4 (pin 27) = 8

It should be noted that unconnected Digital inputs are internally pulled-down to a logic zero so that if these 4 pins are not connected the Unit Address Identifier is assumed to be zero.

b) Input 5 (pin 28 - COMP.EN.IN(1))

This Digital input is designated the Computer Enable input and it performs two distinct functions as follows

(i) Control Loop Parameter updates

The first function of the Computer Enable input is concerned with the ability of the supervisory computer to read and update the Control Loop Parameters. When it is at 15V the supervisory computer is allowed to update Control Loop parameters via the rear connector RS422 serial data link. When the input is at 0V the computer is only allowed to monitor these parameters and is inhibited from changing them.

(ii) Push-button Masking

The second function of the Computer Enable input is concerned with the push-button masking facilities described in Section 4.3.3 b). When it is at 15V and bit 3 of the IC parameter is a logic 1 all front-panel control push-buttons are masked. When it is at 0V the masking level set by bits 0 to 2 is active regardless of the state of bit 3.

c) Input 6 (pin 29 - REM.SP.EN.IN(1))

This Digital input is used to enable the Controller to switch to the Auto mode with Remote Setpoint or the Ratio mode when the front-panel R button is pressed. When this signal is absent the Controller is inhibited from entering the Remote or Ratio modes. For a full description of the use of these facilities see Sections 3.6 and 3.7.

d) Input 7 (pin 30 - TRK.EN.IN(1))

When at 15V, the digital input 7 enables the Controller to enter the TRACK mode, the operation of which is described in Section 3.2.

e) Input 8 (pin 31 - HLD.EN.IN(0))

This digital input is used to determine whether or not the Controller is in the HOLD mode as described in Section 3.1. When at 0V this input will cause the Controller to enter the HOLD state and maintain all the analogue outputs at their current levels. To enable the Controller to operate normally this input must therefore be held at 15V.

It can be seen that external alarm signals can be connected to this input and so "freeze" the Controller output under alarm conditions if required. In applications where this facility is not used then it is recommended that pin 31 is connected to the Watchdog Timer output (pin 9) which is a 15V signal at all times during normal operation.

"MD" STATUS WORD		HARDWARE ALARM OUTPUT	ALARM TYPE
BIT 9	BIT 8	(PIN 18)	
0	0	15V	No alarm
0	1	0V	Sumcheck failure
1	0	0V	Open-circuit Process Variable
1	1	0V	Sumcheck failure and Open-circuit Process Variable

TABLE 2.4 Hardware Alarm output truth table

2.4.5 Digital Outputs

The Controller is provided with 8 digital outputs which produce 0-15V logic levels and occupy pins 16 to 23 inclusive as can be seen from Appendix A. Each of the Digital Outputs consists of an open-collector type TTL gate with a 2k2 pull-up resistor to the +15V rail and can sink a maximum current of 16mA in the logical zero state. The functions of these outputs are as follows:-

a) Output 1 (pin 16 - HI.ALM.OUT(0))

This output signal is used to indicate when the deviation between Setpoint and Process Variable has exceeded the High Deviation Alarm Limit, or if the Process Variable has exceeded the High Absolute Alarm Limit. When either of these alarm conditions are reached pin 16 will fall to 0V, otherwise it will remain at 15V.

b) Output 2 (pin 17 - LO.ALM.OUT(0))

This output signal has the same features as output 1 except that it indicates when the deviation has exceeded the Low Deviation Alarm Limit, or if the Process Variable is below the Low Absolute Alarm Limit.

c) Output 3 (pin 18 - HW.ALM.OUT(0))

This output signal represents the common or collected HARDWARE ALARM condition and will be at 15V during normal Controller operation. The pin 18 output will fall to 0V to indicate an alarm condition if either or both of the following hardware faults occur:-

(i) MEMORY SUMCHECK FAILURE

If the CPU ever detects a memory sumcheck error as described in Section 2.6.2 one of the resultant actions will be to set bit 8 of the "MD" status word to logic "1". This will in turn trigger the HARDWARE ALARM condition.

(ii) PROCESS VARIABLE OPEN-CIRCUIT

This condition occurs if the CPU detects that the Channel 1 analogue input has become open-circuit as described in Section 2.6.3. One of the resultant actions of this will be to set bit 9 of the "MD" status word to logic "1" which will in turn trigger the HARDWARE ALARM condition.

It can be seen from the above that bits 8 and 9 of the "MD" status word identify the cause of the HARDWARE ALARM according to the truth table shown in Table 2.4.

d) Output 4 (pin 19 - BAT.LO.OUT(0))

This output signal is normally at 15V but reverts to 0V as soon as the CPU detects that the voltage of the battery on the memory card has fallen below the non-volatile threshold as discussed in Section 2.6.4.

e) Output 5 (pin 20 - REM.AUT.OUT(0))

This status output is normally at 15V unless the Controller is in the Auto mode with Remote Setpoint (see Section 3.6), or in the Ratio mode (see Section 3.7) at which times it reverts to 0V.

f) Output 6 (pin 21 - HLD + MAN.OUT(0))

This status output is normally at 15V unless either the Hold mode is selected (see Section 3.1) or the Controller is in the Manual mode (see Section 3.4) at which times it reverts to 0V.

For a full description of how status output lines 5 and 6 are used in Cascade Control refer to the System 6000 Controller Applications Handbook, Section 4.

g) Output 7 (pin 22 - BIT.1.OUT(1))

This output line can be set by the user to be a logic 1 or 0 as required. It is accessed by writing a logic 1 or 0 to bit 6 of Status Word DS as discussed in Section 4.3.5 via the 8260 Hand-held terminal or the serial supervisory data link. Writing a logic 1 causes output 7 to set at 15V, while a logic 0 causes it to set at 0V.

This logic output could be used to control the operating modes of an associated 6360 Controller, for example.

h) Output 8 (pin 23 - BIT.2.OUT(1))

This output line is a second user defined logic signal and is identical to output 7 in all respects except that it is accessed by writing a logic 1 or 0 to bit 7 of the DS Status Word parameter.

2.4.6 Serial Data Bus

For a full description of the Serial Data Bus, including discussions of:

Interface Connections,
Cable Impedance and Termination,
and Interface Signal Polarity

refer to the System 6000 Installation Guide Section 7.

2.5 Controller Power-Up Sequence

There are two possibilities that can occur when the 6360 Process Controller is connected to an external power supply and these are as follows:-

2.5.1 Power-Up from Initial Un-programmed State

When a Controller is first powered-up before any parameters have been programmed, the parameter storage area of the non-volatile memory will be empty. The first thing that the CPU does after the power-up sequence has been completed is to check the memory for stored sumcheck patterns. These sumchecks are only updated as parameters are entered into the memory so this check will cause a memory error condition to occur upon initial power-up. Consequently the CPU will force the instrument to behave as for MEMORY SUMCHECK FAIL conditions as described in Section 2.6.2.

2.5.2 Power-Up from a Previously Programmed State

If the power supply to an instrument is interrupted during its normal working state then all the parameters will be stored in the non-volatile memory area, provided that the standby battery is properly connected (see Section 2.3.1). Upon subsequent re-establishment of the power supply the CPU will verify the stored memory sumcheck values. This test should be carried out successfully and the CPU will then return the instrument to exactly the same set of operating conditions as were present before the power interruption unless switch 5 of bank S2 is ON, in which case the Controller reverts to Manual mode (see Section 2.3.2 b) (v)).

INSTRUMENT FAULT	EXTERNAL LOGIC INDICATION	PROCESS VARIABLE DISPLAY	OPERATING MODE CHANGE	COMMAND PARAMETER INDICATION	ERROR RECOVERY PROCEDURE
Watchdog (hardware) failure	Pin 9 =0V; Pins 16 to 23 incl. = 0V	Blanked	Analogue outputs "frozen"	All comms. disabled	Replace Instru-ment
Memory Sumcheck failure	Pin 18 =0V	No change	FORCED MANUAL	DS bit 2 set to 0; MD bit 8 set to 1	Re-program; set MD bit 8 to 0
Open-circuit PV input	Pin 18 =0V	Reads 1L value	FORCED MANUAL	DS bit 2 set to 0; MD bit 9 set to 1	Apply valid PV input
Battery voltage low	Pin 19 =0V	Decimal points flash	No change	DS bit 3 set to 0	Replace battery

TABLE 2.5 6360 Controller Diagnostics

2.6 6360 Controller Hardware Diagnostic Facilities

The 6360 incorporates a number of diagnostic facilities for continuously monitoring and checking the status of the Controller hardware during operation. Each of these diagnostic facilities provides the following features:-

a) Indication and identification of the fault via the 3 operator interfaces, viz:-

   (i) Front-panel display indication
   (ii) Local indication via rear connector logic signals
   (iii) Remote indication via the serial data links.

b) Well defined shut-down procedures for each type of fault with the instrument taking up pre-determined operating conditions to maximise plant safety.

c) Automatic restart under certain transient fault conditions.

Table 2.5 lists the 4 major instrument faults that can occur and shows that they have a number of common characteristics, viz:-

a) Each fault is identified by a particular external logic indication on the rear connector.

b) Certain faults affect the large 4 digit Process Variable display.

c) Certain faults affect the 6360 Operating mode in a controlled "fail-safe" manner.

d) Each fault sets various status bits within the Command Parameters so that the condition can be monitored remotely via the supervisory data link.

e) Each of the faults has a well-defined error recovery procedure allowing the operator to quickly identify and rectify a fault condition.

The diagnostic facilities listed in Table 2.5 are described in the following 4 sections.

2.6.1 Watchdog Timer

The CPU card incorporates a Watchdog Timer circuit which has to be refreshed periodically by the CPU to maintain correct operation, as described in Section 1.4.2. If the CPU fails to refresh the Watchdog at the normal rate due to some fault condition, the following actions occur:-

a) All the Front-panel displays are extinguished except for the bottom segments of the Setpoint and Process Variable bargraphs. This provides immediate visual indication to the operator.

b) The WATCHDOG TIMER logic output on pin 9 of the rear connector is reset from 15V to 0V to indicate the fault condition and will stay low as long as the fault persists. This feature allows the pin 9 output to be used for external alarm monitoring purposes or for switching in Manual back-up systems etc.

c) All 8 of the digital outputs (pins 16 to 23 inclusive) are reset from 15V to 0V to indicate the fault condition and will stay low as long as pin 9 is at 0V.

d) The "sample and hold" circuitry is forced into the "hold" state so that the associated analogue outputs will retain the last voltage level set by the CPU before the Watchdog tripped out. (See Sections 1.4.5 and 2.4.3) Under these conditions the capacitors are not refreshed by the DAC and an output drift rate of up to 0.5mV/sec maximum may occur (equivalent to a drift of 1% of full scale in 3 minutes worst case).

While the Watchdog is tripped out, a circuit automatically attempts to restart the instrument at approximately 10ms intervals, using the same restart procedure as when the 6360 is first powered up. Consequently there are three possibilities that can occur after each restart attempt:-

(i) If the failure was due to a transient fault without loss of memory the instrument will restart automatically as described in Section 2.5.2. The Watchdog output, pin 9, is reset to 15V by the CPU about 30ms after the restart occurs.

(ii) If the failure was due to a transient fault which has corrupted the memory, then the instrument will restart automatically as described in Section 2.5.1. The Watchdog output will again be reset to 15V after a 30ms period.

(iii) If the failure was due to a permanent hardware fault such as a damaged integrated circuit, then the CPU will not be able to refresh the Watchdog and the pin 9 logic output will remain at 0V.

The 6360 Controller hardware incorporates data input/output ports on the Front-panel, Digital Input/Output, and Analogue Input/Output daughter boards of Section 1.4.1, 1.4.4, and 1.4.5 respectively. Before the CPU carries out a data transfer to or from any of these ports, the hardware itself is checked. This is done by connecting a bit from each output port back to a spare bit on the corresponding input port. The CPU then checks that these test bits can be set or reset correctly before each port is used for a data transfer. If any input/output port fails this hardware check the CPU stops refreshing the Watchdog so that the Watchdog Timer trips out as described above.

2.6.2 Memory Sumcheck

The Controller maintains a sumcheck of all the Control Loop Command Parameters that are entered and stored in the non-volatile memory area. Any corruption of these stored parameters will cause the corrupted sumcheck to differ from the previously stored sumcheck value. When this memory error condition is detected by the CPU it forces the following actions:-

a) The Controller will enter the FORCED MANUAL operating mode as described in Section 3.3 with the Manual (M) push-button LED flashing to indicate a fault condition to the operator.

b) The 3-Term Control output, pin 32, will be set to 0V.

c) The CPU will force three of the Command Parameters to the following values:-

   (i) The 3-Term Output High limit, HO, is set to 99.99%.

   (ii) The 3-Term Output Low limit, LO, is set to zero.

   (iii) The 3-Term Output value, OP, is set to either LO or HO, whichever causes the controller electrical output to go to a minimum, depending on whether output display inversion is selected.

   This ensures that an operator can quickly set the 3-Term Control output anywhere in the range 0-10V by means of the front-panel Raise/Lower buttons without first needing to use an 8260 Hand-held terminal to clear the fault condition. It should be noted that all other Command Parameters stored in the non-volatile memory, including any that may be corrupted, are left unaltered by the CPU.

d) The sumcheck failure will cause the HARDWARE ALARM logic output, pin 18, to be set to 0V as described in Section 2.4.5 c).

e) The sumcheck failure will set bit 2, the HARDWARE ALARM bit, of the "DS" status word to logic zero as described in Section 4.3.5.

f) The MEMORY SUMCHECK FAIL bit of the "MD" status word, bit 8, will be set to logic one as described in Section 4.3.6 a) (viii) to indicate that a sumcheck failure caused the HARDWARE ALARM output to be set to 0V.

In order that the Controller can be released from the FORCED MANUAL operating mode of a) above it is necessary to first reset the MEMORY SUMCHECK FAIL bit. This is achieved by writing a logic zero to bit 8 of the "MD" status parameter via the 8260 Hand-held terminal or the supervisory data link. If the memory fault was only due to a transient corruption that can be overwritten by the CPU then the following actions will occur:-

a) The MEMORY SUMCHECK FAIL, bit 8, of the "MD" status word will reset to logic zero.

b) The Controller will revert to the normal MANUAL operating mode of Section 3.4 with the Manual (M) push-button LED steady.

c) Any other operating modes can be selected as required.

d) Any Command Parameter of Table 4.1 that has been corrupted and is required for correct loop operation must be re-entered via the Hand-held terminal or the supervisory data link. The CPU will then update the sumcheck after each entry.

e) The HARDWARE ALARM logic output, pin 18, will reset to 15V.

f) The HARDWARE ALARM, bit 2 of the "DS" status word, will reset to logic "1".

If the memory error was caused by a permanent hardware fault the CPU will not reset the MEMORY SUMCHECK fail bit as in a) above. Consequently the Controller will remain in the FORCED MANUAL operating mode as described at the beginning of Section 2.6.2 until the fault is rectified.

2.6.3 Open-Circuit Process Variable

The circuitry associated with the Channel 1 analogue input (Process Variable) is capable of detecting an open-circuit condition as described in Section 2.4.2 a). As soon as this condition is detected the 3-Term Output is put into a "hold" state for 3 seconds. If the open-circuit condition no longer exists after 3 seconds the 6360 continues in its current operating mode without bumping the 3-Term Output. If the open-circuit condition still exists after the 3 seconds the CPU causes the following actions to occur:-

a) The Controller will enter the FORCED MANUAL operating mode as described in Section 3.3 with the Manual (M) push-button LED flashing to indicate the fault condition to the operator.

b) The 3-Term Control Output, pin 32, will be affected as follows:-

(i) If the Controller was operating in the HOLD mode the 3-Term Control Output will remain at the level set just prior to the occurence of the fault condition.

(ii) If the Controller was operating in the MANUAL mode the 3-Term Control Output will remain at the level set just prior to the occurence of the fault condition. This level can subsequently be altered by means of the Front-panel Raise/Lower push-buttons.

(iii) If the Controller was operating in the TRACK mode prior to the fault occuring the 3-Term Control Output will be unaffected and will continue tracking the Channel 3 analogue input.

(iv) If the Controller was operating in the AUTO, REMOTE AUTO or RATIO modes when the fault occurred, the subsequent Control action will be determined by the setting of switch no. 5 of switch bank S2 viz:-

S2 no. 5 - OFF

The 3-Term Control Output will remain at the last calculated level prior to the fault condition occurring.

S2 no. 5 - ON

The controller electrical output, pin 32, will be set to a minimum, OP being set to HO, or LO depending on whether Output Display Inversion is selected, or not.

In both of these cases the 3-Term Control output level can be altered by means of the Front-panel Raise/Lower push-buttons.

c) The open-circuit condition will cause the HARDWARE ALARM logic output, pin 18, to be set to 0V as described in Section 2.4.5 c).

d) The open-circuit condition will set bit 2, the HARDWARE ALARM bit, of the "DS" status word to logic zero as described in Section 4.3.5.

e) The PROCESS VARIABLE OPEN-CIRCUIT bit of the "MD" status word, bit 9, will be set to logic one as described in Section 4.3.6 a) (vii) indicating that an open-circuit condition caused the HARDWARE ALARM output to be set to 0V.

To release the Controller from the FORCED MANUAL operating mode the Channel 1 Analogue input must be provided with a valid drive signal, i.e. 0-10V or 1-5V. Only when this has occurred will the CPU cause the following actions to take place:-

a) The Controller will revert to the normal MANUAL operating mode of Section 3.4 with the Manual (M) push-button LED steady.

b) Any other operating modes can be selected as required.

c) The HARDWARE ALARM logic output, pin 18, will reset to 15V.

d) The HARDWARE ALARM, bit 2 of the "DS" status word, will reset to logic "1".

e) The PROCESS VARIABLE OPEN-CIRCUIT bit of the "MD" status word, bit 9, will be reset to logic zero.

2.6.4 Standby Battery Check

The Memory daughter board incorporates a long-life Lithium Standby Battery which powers the RAM circuits when the external power supply has failed or is interrupted for any reason (see Section 1.4.3). At approximately 10 minute intervals the CPU connects the battery to a dummy load and measures its voltage. If this voltage drops below the threshold necessary to keep the memory non-volatile under power failure conditions the CPU takes the following actions:-

a) All the unused decimal points on the front-panel digital readout are flashed continuously to warn an operator of the battery condition.

b) The BATTERY VOLTAGE LOW logic output, pin 19, will be set to 0V.

c) The BATTERY VOLTAGE LOW bit of the "DS" status word, bit 3, will be set to logic 0.

These indications will continue to be operative until the battery on the Memory board is replaced by a new unit. When the Controller is subsequently powered up, the CPU immediately starts with a battery voltage test and if this is successful the following actions are taken:-

a) Only the decimal point programmed via the "DP" status word (see Section 4.3.2) will be illuminated, the others will remain off.

b) The BATTERY VOLTAGE LOW logic output, pin 19, will be reset to 15V.

c) The BATTERY VOLTAGE LOW bit of the "DS" status word, bit 3, will be reset to logic 1.

d) All parameters stored in the non-volatile memory area will have been lost, so the instrument will behave as if powered up from an initially un-programmed state (see Section 2.5.1). The CPU will thus force a MEMORY SUMCHECK FAILURE condition and the operator must re-program the instrument as detailed in Section 2.6.2.

It should be noted that if the memory isolation switch SW1 of Fig 2.1, is inadvertently left out, the CPU will immediately detect this as soon as the Controller is powered up and it will behave as if the battery voltage were low.

Section 3 6360 Process Controller Operating Modes

The 6360 Process Controller is capable of operating in one of 7 different control modes. These modes are listed below in descending priority order:-

CONTROL MODE	PRIORITY ORDER
HOLD	1 - highest
TRACK	2
FORCED MANUAL	3
MANUAL	4
AUTO (Local Setpoint)	5
REMOTE AUTO or RATIO	6
AUTO FALL-BACK	7 - lowest

The operating modes as listed are described in priority order in the next 7 sub-sections of Section 3. Each operating mode has a truth table, such as Table 3.1.1, showing which combinations of external logic inputs and Front-panel push-button selections produce that particular mode. A second table, such as Table 3.1.2, then shows the effect that operating mode has on the logic outputs, the Front-panel status and push-button LEDs. The behaviour of the Local Setpoint is considered for the two cases when it is either held constant when not in the Auto mode (S2 no. 6 - OFF), or when it tracks the Process Variable input when not in the Auto mode (S2 no. 6 - ON). In each of these cases the effects that the Raise/Lower buttons are allowed to have on the Local or Ratio Setpoints are listed, while their action on the Controller output is also indicated separately.

CATEGORY		STATE
Logic inputs	$\overline{\text{HOLD}}$ enable (pin 31) TRACK enable (pin 30) REMOTE SETPOINT/RATIO enable (pin 29)	0V X X
Push-buttons	MANUAL (M) AUTO (A) REMOTE/RATIO (R)	X X X

TABLE 3.1.1 6360 HOLD mode entry conditions

CATEGORY		STATE
Logic outputs	$\overline{\text{REMOTE AUTO/RATIO}}$ status (pin 20) $\overline{\text{HOLD + MANUAL}}$ status (pin 21)	15V 0V
Status LEDs	HOLD LED TRACK LED	ON X
Push-button LEDs	MANUAL (M) AUTO (A) REMOTE/RATIO (R)	X X X
Local Setpoint	Action with S2 no. 6 OFF Action with S2 no. 6 ON	Raise/Lower or Remote Track PV or Remote
	3-Term Control output (pin 32)	Fixed

TABLE 3.1.2 6360 HOLD mode operating characteristics

KEY

X = don't care

3.1 Hold Mode

3.1.1 Hold Mode Entry Conditions

It can be seen from Table 3.1.1 that the HOLD mode entry condition is as follows:-

a) The $\overline{\text{HOLD}}$ ENABLE logic input, pin 31, is at 0V.

This signal overrides all other logic inputs and Front-panel push-button selections, thus making the HOLD mode the highest priority operating condition. In the HOLD mode, the following Front-panel indications and rear connector logic signals apply:-

a) The Front-panel HOLD mode yellow status LED is illuminated.

b) The $\overline{\text{REMOTE AUTO/RATIO}}$ STATUS logic output, pin 20, is at 15V.

c) The $\overline{\text{HOLD + MANUAL}}$ STATUS logic output, pin 21, is at 0V.

Other LEDs may be illuminated on the Front-panel depending upon the status of the other logic inputs and the push-buttons. These will indicate the "fall-back" mode that the Controller will revert to when it is taken out of the HOLD mode, as follows:-

d) The Controller will revert to the TRACK mode of Section 3.2 if the TRACK mode status LED is illuminated.

Also one of the following indications will always occur:-

e) The Manual mode (M) push-button LED may be flashing or steady to indicate a fall-back to the FORCED or Normal MANUAL operating modes of Section 3.3 or 3.4 respectively.

f) The Auto mode (A) push-button LED may be flashing or steady to indicate a reversion to the AUTO FALL-BACK or AUTO operating modes of Sections 3.8, 3.9 and 3.5 respectively.

g) The Remote/Ratio mode (R) push-button LED may be illuminated to indicate fall-back to the REMOTE AUTO or RATIO operating modes of Sections 3.6 and 3.7 respectively depending upon the setting of switch no. 1 of switch bank S2.

It should be noted that these fall-back modes occur in priority order when more than one is present at a time, e.g. HOLD, TRACK and AUTO could be indicated simultaneously but the Controller would enter the TRACK mode when it came out of HOLD and would only enter AUTO when released from TRACK.

3.1.2 Hold Mode Operating Characteristics

While in the HOLD mode Table 3.1.2 shows that the 6360 exhibits the following operating characteristics:-

a) The 3-Term Control Output, pin 32, is continuously maintained by the CPU at the level that existed at the instant of switching over from any previously selected lower priority mode.

b) The 3-Term Control Output level is displayed on the yellow horizontal bargraph in 10% steps from 0 to 100%, unless the Measured Power facility is used.

c) The 3-Term Control Output level may be inspected as a 4 digit number in the range 0 to 99.99% on the digital readout by holding in the Manual (M), Auto (A) or Remote/Ratio (R) push-buttons. However, an operator is inhibited from using the Raise/Lower push-buttons to alter the 3-Term output in this mode. (Note that the pressing of these buttons may cause the "fall-back" mode indicated to correspond to the button pressed).

d) The Controller may be used to display a Measured Power signal as described in Section 3.10.

e) If an open-circuit condition is detected on the Channel 1 analogue input the Controller will enter the FORCED MANUAL mode of Section 3.3 but the 3-Term output level will not be affected as described in Section 2.6.3 b).

f) If the Process Variable signal is connected to the Channel 1 analogue input, then this signal will be displayed on the left-hand vertical bargraph as a percentage of the PV range 1L to 1H (see Section 4.8.4). With no push-buttons held in this signal will also be displayed on the digital readout in engineering units as described in Section 3.4.4 b).

It should be noted that the 3-Term Control algorithm continuously adjusts the Integral term so that upon subsequent return to the AUTO, REMOTE AUTO or RATIO operating modes the transfer will occur in a bumpless and procedureless manner. However, care should be taken when entering the TRACK mode from HOLD as the control output tracks the Channel 3 analogue input which may not be at the same level as the current 3-term output.

3.1.3 Local Setpoint Updating in Hold Mode

The Resultant Setpoint (SP) is always displayed on the right-hand vertical bargraph as a percentage of the full scale PV range 1L to 1H (see Section 4.8.3). In the HOLD mode, SP is the Local Setpoint value (SL) after any Trim has been applied as described in Section 3.11. The Local Setpoint can be updated as follows :-

a) S2 no. 6 - ON

When switch number 6 of switch bank S2 is ON the Local Setpoint tracks the Process Variable input when not in AUTO. The Raise/Lower push-buttons are inhibited and the Setpoint cannot be updated via either of the serial data links. The Local Setpoint will track the Process Variable input, except when the Remote (R) push-button is pressed and the REMOTE SETPOINT ENABLE logic input (pin 29) is at 15V. Under these conditions the Local Setpoint will follow the Remote Setpoint input applied to the Controller.

b) S2 no. 6 - OFF

When switch number 6 of S2 is OFF the Local Setpoint remains constant when not in AUTO. Table 3.1.2 shows that the Raise/Lower push-buttons can be used to alter the Local Setpoint provided that the Display Setpoint button (SP) is held in at the same time. If this button is not held in, then Raise/Lower is inhibited and the Setpoint is held constant. However, the Local Setpoint will again follow the Remote Setpoint input when R is pressed and the REMOTE SETPOINT ENABLE input is at 15V. The Local Setpoint can also be updated via the serial data links, except for the latter case when it is following the Remote Setpoint input.

Since the $\overline{\text{HOLD}}$ ENABLE input is a negative logic signal it follows that the Controller will only operate in a conventional mode such as AUTO when this input is connected to 15V, and recommended procedures for achieving this are discussed in Section 2.4.4 e).

CATEGORY		STATE
Logic inputs	$\overline{\text{HOLD}}$ enable (pin 31) TRACK enable (pin 30) REMOTE SETPOINT/RATIO enable (pin 29)	15V 15V X
Push-buttons	MANUAL (M) AUTO (A) REMOTE/RATIO (R)	X X X

TABLE 3.2.1 6360 TRACK mode entry conditions

CATEGORY		STATE
Logic outputs	$\overline{\text{REMOTE AUTO/RATIO}}$ status (pin 20) $\overline{\text{HOLD + MANUAL}}$ status (pin 21)	15V 15V (or 0V if MANUAL LED ON)
Status LEDs	HOLD LED TRACK LED	OFF ON
Push-button LEDs	MANUAL (M) AUTO (A) REMOTE/RATIO (R)	X X X
Local Setpoint	Action with S2 no. 6 OFF Action with S2 no. 6 ON	Raise/Lower or Remote Track PV or Remote
	3-Term Control output (pin 32)	Tracks channel 3 analogue I/P

TABLE 3.2.2 6360 TRACK mode operating characteristics

KEY

X = don't care

3.2 Track Mode

3.2.1 Track Mode Entry Conditions

It can be seen from Table 3.2.1 that the TRACK mode entry conditions are as follows:-

a) The $\overline{\text{HOLD}}$ ENABLE logic input, pin 31, is at 15V.

b) The TRACK ENABLE logic input, pin 30, is at 15V.

Thus the TRACK mode is the second highest priority operating condition in which the following Front-panel indications and rear connector logic signals are present:-

a) The Front-panel TRACK mode yellow status LED is illuminated.

b) The $\overline{\text{REMOTE AUTO/RATIO}}$ STATUS logic output, pin 20, is at 15V.

c) The $\overline{\text{HOLD + MANUAL}}$ STATUS logic output, pin 21, will remain at 15V unless the Manual (M) push-button has been pressed at which time this signal will revert to 0V.

One of the following Front-panel indications will occur depending upon the status of the REMOTE SETPOINT/RATIO ENABLE logic input, and the push-buttons. These will show the "fall-back" mode that the Controller will revert to when it is taken out of the TRACK mode as follows:-

d) The Manual mode (M) push-button LED may be flashing or steady to indicate a fall-back to the FORCED or Normal MANUAL operating modes of Section 3.3 or 3.4 respectively.

e) The Auto mode (A) push-button LED may be flashing or steady to indicate a reversion to the AUTO FALL-BACK or AUTO operating modes of Sections 3.8, 3.9 and 3.5 respectively.

f) The Remote/Ratio mode (R) push-button LED may be illuminated to indicate fall-back to the REMOTE AUTO or RATIO operating modes of Sections 3.6 and 3.7 respectively depending upon the setting of switch no. 1 of switch bank S2.

3.2.2 Track Mode Operating Characteristics

While in the TRACK mode Table 3.2.2 shows that the 6360 exhibits the following operating characteristics:-

a) The 3-Term Control Output, pin 32, is forced to follow the signal applied to the Channel 3 analogue input. Any input filtering specified by the IF parameter of Section 4.6.2 is removed and any input signal processing specified by the IC parameter of Section 4.3.3 is overridden and forced to be linear. It should also be noted that in the TRACK mode the 3-Term Control Output follows the Channel 3 input signal regardless of whether the Normal or Inverse Output modes have been selected by switch no. 4 of switch bank S2 (see Section 2.3.2 b)).

   If ON/OFF control is selected (XP=0) the controller output, pin 32, will go to a maximum if the channel 3 input is above mid range, and will go to a minimum if the channel 3 input is below mid range. There is a 0.5% hysteresis either side of the channel 3 input mid range.

b) The 3-term Control Output level is displayed on the yellow horizontal bargraph in 10% steps from 0 to 100%.

c) The 3-Term Control Output level may be inspected as a 4 digit number in the range 0 to 99.99% on the digital readout by holding in the Manual (M), Auto (A) or Remote/Ratio (R) push-buttons. However, an operator is inhibited from using the Raise/Lower push-buttons to alter the 3-Term output in this mode. (Note that the pressing of these buttons may cause the "fall-back" mode indicated to correspond to the button pressed.)

d) The Controller cannot be used to display a Measured Power signal in this mode because the Channel 3 input is used for the TRACK signal.

e) If an open-circuit condition is detected on the Channel 1 analogue input, the Controller will enter the FORCED MANUAL mode of Section 3.3 but the 3-Term output tracking action will not be affected, as described in Section 2.6.3 b).

f) If the Process Variable signal is connected to the Channel 1 analogue input, then this signal will be displayed on the left-hand vertical bargraph as a percentage of the PV range 1L to 1H (see Section 4.8.4). With no push-buttons held in this signal will also be displayed on the digital readout in engineering units as described in Section 3.4.4 b).

It should be noted that the 3-Term control algorithm continuously adjusts the Integral term so that upon subsequent return to the AUTO, REMOTE AUTO or RATIO operating modes the transfer will occur in a bumpless and procedureless manner. However, when the Controller first enters the TRACK mode from the MANUAL, AUTO, REMOTE AUTO or RATIO operating modes the 3-Term Control output is forced to equal the Channel 3 input in a single step. Thus entry into the TRACK mode is not bumpless.

3.2.3 Local Setpoint Updating in Track Mode

The Resultant Setpoint (SP) is always displayed on the right-hand vertical bargraph as a percentage of the PV range 1L to 1H (see Section 4.8.3). In the TRACK mode, SP is the Local Setpoint value (SL) after any Trim has been applied as described in Section 3.11. The Local Setpoint can be updated as follows :-

a) S2 no. 6 - ON

When switch number 6 of switch bank S2 is ON, Table 3.2.2 shows that the Local Setpoint tracks the Process Variable input. Hence the Raise/Lower push-buttons are inhibited during TRACK and also the Local Setpoint cannot be updated via either of the serial data links. However, when the Remote (R) push-button is pressed and the REMOTE SETPOINT ENABLE input is at 15V, the Local Setpoint will follow the Remote Setpoint input applied to the Controller.

b) S2 no. 6 - OFF

When switch number 6 of S2 is OFF, Table 3.2.2 shows that the Raise/Lower push-buttons can be used to alter the Local Setpoint provided that the Display Setpoint button (SP) is held in at the same time. If this button is not held in then Raise/Lower is inhibited and the Setpoint is held constant. However, the Local Setpoint will again follow the Remote Setpoint input when the Remote push-button (R) is pressed and the REMOTE SETPOINT ENABLE input is at 15V. The Local Setpoint can also be updated via the serial data links at all times except for the latter case when it is following the Remote Setpoint input.

The TRACK mode facilities can be used for loop-start up procedures in Cascade Control applications which are described in detail in Section 4 of the System 6000 Controller Applications Handbook.

CATEGORY		STATE
Logic inputs	$\overline{\text{HOLD}}$ enable (pin 31) TRACK enable (pin 30) REMOTE SETPOINT/RATIO enable (pin 29)	15V 0V X
Push-buttons	MANUAL (M) AUTO (A) REMOTE/RATIO (R)	X X X
Channel 1 analogue input		Open-circuit

TABLE 3.3.1 6360 FORCED MANUAL mode entry conditions

CATEGORY		STATE
Logic outputs	$\overline{\text{REMOTE AUTO/RATIO}}$ status (pin 20) $\overline{\text{HOLD + MANUAL}}$ status (pin 21)	15V 0V
Status LEDs	HOLD LED TRACK LED	OFF OFF
Push-button LEDs	MANUAL (M) AUTO (A) REMOTE/RATIO (R)	FLASH OFF OFF
Local Setpoint	Action with S2 no. 6 OFF Action with S2 no. 6 ON	Raise/Lower or Remote Track PV
	3-Term Control output (pin 32)	Raise/Lower

TABLE 3.3.2 6360 FORCED MANUAL mode operating characteristics

KEY

X = don't care

3.3 Forced Manual Mode

3.3.1 Forced Manual mode entry conditions

The 6360 Controller will enter the FORCED MANUAL operating mode when either of the following conditions occur :-

a) An open-circuit condition is detected on the Channel 1 analogue input as shown in Table 3.3.1 and described in Section 2.6.3.

b) A MEMORY SUMCHECK FAILURE condition is detected either at power-on or during operation as described in Section 2.6.2.

The FORCED MANUAL condition is the third highest priority operating condition after HOLD and TRACK. The following Front-panel indications and rear-connector logic signals are operative in FORCED MANUAL:-

a) The yellow Manual Mode (M) push-button LED flashes continuously.

b) The $\overline{\text{HARDWARE ALARM}}$ logic output, pin 18, is at 0V.

c) The $\overline{\text{REMOTE AUTO/RATIO}}$ STATUS logic output, pin 20, is at 15V.

d) The $\overline{\text{HOLD + MANUAL}}$ STATUS logic output, pin 21, is at 0V.

3.3.2 Forced Manual Mode operating characteristics

The operating characteristics of a Controller in the FORCED MANUAL mode are identical to those of the normal MANUAL mode given in Section 3.4.2. The only difference seen by an operator is that it is not possible to exit from this mode by pressing another push-button while the entry conditions of Section 3.3.1 persist.

3.3.3 Local Setpoint updating in Forced Manual Mode

Table 3.3.2 shows that the Local Setpoint can be updated in FORCED MANUAL mode in exactly the same way as for normal MANUAL mode described in Section 3.4.3.

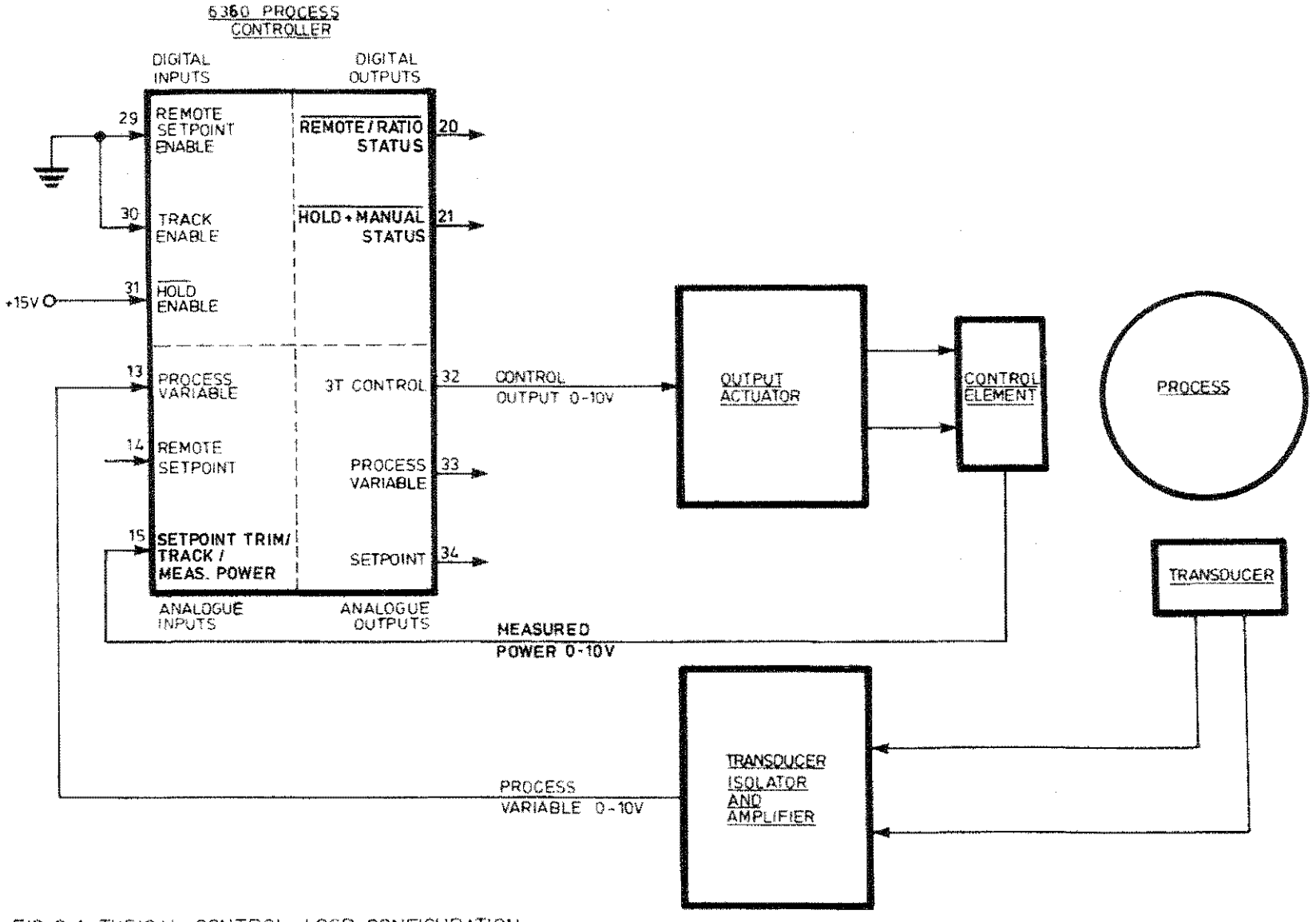

FIG 3·1 TYPICAL CONTROL LOOP CONFIGURATION FOR MANUAL OR LOCAL AUTO MODES

3.4 Manual Mode

Fig 3.1 illustrates how a 6360 Controller may be configured within a control loop to function as a conventional Manual or Operator station. The Controller must be operating in the Manual mode when used in this way. Means of achieving this and the operating characteristics obtained are listed in the following sections.

3.4.1 Manual Mode Entry Conditions

It can be seen from Table 3.4.1 that the entry conditions for the normal MANUAL operating mode are as follows:-

a) The $\overline{\text{HOLD}}$ ENABLE logic input, pin 31, is at 15V.

b) The TRACK ENABLE logic input, pin 30, is at 0V.

c) The MANUAL mode (M) push-button was the last one pressed.

Thus the MANUAL mode is the fourth highest priority operating condition which is also entered whenever conditions a) and b) above are true and the following occurs:-

d) The 6360 Controller is powered up with switch no. 5 of switch bank S2 ON as described in Section 2.3.2 b).

While operating in MANUAL the following Front-panel indications and rear-connector logic signals apply:-

a) The yellow Manual Mode (M) push-button LED is illuminated.

b) The $\overline{\text{REMOTE AUTO/RATIO}}$ STATUS logic output, pin 20, is at 15V.

c) The $\overline{\text{HOLD + MANUAL}}$ STATUS logic output, pin 21, is at 0V.

CATEGORY		STATE
Logic inputs	$\overline{\text{HOLD}}$ enable (pin 31) TRACK enable (pin 30) REMOTE SETPOINT/RATIO enable (pin 29)	15V 0V X
Push-buttons	MANUAL (M) AUTO (A) REMOTE/RATIO (R)	ON OFF OFF

TABLE 3.4.1 6360 MANUAL mode entry conditions

CATEGORY		STATE
Logic outputs	$\overline{\text{REMOTE AUTO/RATIO}}$ status (pin 20) $\overline{\text{HOLD + MANUAL}}$ status (pin 21)	15V 0V
Status LEDs	HOLD LED TRACK LED	OFF OFF
Push-button LEDs	MANUAL (M) AUTO (A) REMOTE/RATIO (R)	ON OFF OFF
Local Setpoint	Action with S2 no. 6 OFF Action with S2 no. 6 ON	Raise/Lower Track PV
	3-Term Control output (pin 32)	Raise/Lower

TABLE 3.4.2 6360 MANUAL mode operating characteristics

KEY

X = don't care

3.4.2 Manual Mode Operating Characteristics

While in the normal MANUAL mode Table 3.4.2 shows that the 6360 exhibits the following operating characteristics:-

a) The 3-Term Control Output, pin 32, is continuously maintained by the CPU at the level that existed at the instant of switching over from any previously selected operating mode.

b) The 3-Term Control output level is displayed on the yellow horizontal bargraph in 10% steps from 0 to 100%, unless the Measured Power facility is used.

c) The 3-Term Control output level may be inspected as a 4 digit number in the range 0 to 99.99% on the digital readout by holding in the Manual Mode (M) push-button. While this push-button is held in an operator may alter the 3-Term Control output level by means of the Raise/Lower buttons. The buttons have an accelerating action and will Raise/Lower the 3-Term Output through the full 100% range in approximately ten seconds. Releasing either of these buttons causes the acceleration to be reset to the initial rate allowing very small incremental changes to be made to the 3-Term output level by repeatedly pressing and releasing the appropriate button. These Raise/Lower buttons have no effect on the Output level unless the Manual (M) button is held in. If inadvertantly all 3 buttons are pressed at the same time the 6360 will inhibit all of them and put the 3-Term output into a temporary Hold state.

d) The Controller may be used to display a Measured Power signal derived from a Control Element as shown in Figure 3.1 and under these conditions the Raise/Lower operation of the 3-Term output level is as described in Section 3.10.

e) If an open-circuit is detected on the Channel 1 analogue input, the Controller will enter the FORCED MANUAL mode of Section 3.3 and operation will be as described in Section 3.3.2.

f) If the Process Variable signal is connected to the Channel 1 analogue input, then this signal will be displayed on the left-hand vertical bargraph as a percentage of the PV range 1L to 1H (see Section 4.8.4). With no push-buttons held in this signal will also be displayed on the digital readout in engineering units as described in Section 3.4.4 b).

It should be noted that the 3-Term Control algorithm continuously adjusts the integral term so that upon subsequent selection of the AUTO, REMOTE AUTO or RATIO operating modes the transfer will occur in a bumpless and procedureless manner.

3.4.3 Local Setpoint Updating in Manual Mode

The Resultant Setpoint (SP) is always displayed on the right-hand vertical bargraph as a percentage of the PV range, 1L to 1H (see Section 4.8.3). In the MANUAL mode, SP is the Local Setpoint value (SL) after any Trim has been applied as described in Section 3.11. The Local Setpoint can be updated as follows :-

a) S2 no. 6 - ON

When switch number 6 of switch bank S2 is ON, Table 3.4.2 shows that the Local Setpoint tracks the Process Variable input. Hence the Raise/Lower push-buttons are inhibited from changing the Local Setpoint in MANUAL and updates are also not permitted via either of the serial data links.

b) S2 no. 6 - OFF

When switch number 6 of S2 is OFF, the Local Setpoint remains constant when not in AUTO. Table 3.4.2 shows that the Raise/Lower push-buttons can be used to alter the Local Setpoint provided that the Display Setpoint button (SP) is held in at the same time.

The Raise/Lower buttons have the same accelerating effect on the Setpoint as on the Output described previously. It should be noted, however, that as long as the SP button is depressed the Raise/Lower buttons only affect the Local Setpoint and not the Controller Output level. Also, with switch no. 6 in the OFF position Local Setpoint changes are permitted via either of the serial data links at all times.

3.4.4 Programming Parameters in Manual Mode

In order that the 6360 Process Controller can function correctly in the MANUAL mode it is necessary to programme certain control loop parameters into it using the procedures described in Section 4. The minimum number of parameters that are required to obtain operation at each level of Manual control are listed as follows:-

a) Raise/Lower Control of Output Level

In order that the Raise/Lower push-buttons can control the output level, two parameters are required thus:-

HO, LO - Control output High and Low Limit (see Section 4.5.5)

The Output can then be altered within these two limits.

b) Display of Process Variable

If it is required to monitor the Process Variable as well, then 4 further parameters are required, thus:-

DP - Decimal point position (See Section 4.3.2)

IC - Input Channel processing routines (see Section 4.3.3)

1H, 1L - Process Variable High and Low Range (see Section 4.4.1)

The Front-panel digital readout will then display the Process Variable as a 4 digit number within the PV range 1L to 1H and with a correctly positioned decimal point. It will also be indicated on the left-hand vertical bargraph as a percentage of the PV range.

c) Raise/Lower Control of Local Setpoint

If it is required to enter a Local Setpoint in MANUAL mode prior to selecting AUTO then it is necessary to enter 3 further parameters, thus:-

HS, LS - Setpoint High and Low Limits (see Section 4.5.2)

SL - Local Setpoint (see Section 4.7.1)

The Local Setpoint can then be changed using the Raise/Lower buttons as described in Section 3.4.3. Note that these 3 parameters all have the same range as the Process Variable i.e. 1L to 1H. Also, if a fixed Local Setpoint is required HS and LS should be set to this required value. An operator is then inhibited from altering it via the SP and Raise/Lower buttons.

CATEGORY		STATE
Logic inputs	$\overline{\text{HOLD}}$ enable (pin 31) TRACK enable (pin 30) REMOTE SETPOINT/RATIO enable (pin 29)	15V 0V 0V
Push-buttons	MANUAL (M) AUTO (A) REMOTE/RATIO (R)	OFF ON OFF

TABLE 3.5.1 6360 AUTO mode entry conditions

CATEGORY		STATE
Logic outputs	$\overline{\text{REMOTE AUTO/RATIO}}$ status (pin 20) $\overline{\text{HOLD + MANUAL}}$ status (pin 21)	15V 15V
Status LEDs	HOLD LED TRACK LED	OFF OFF
Push-button LEDs	MANUAL (M) AUTO (A) REMOTE/RATIO (R)	OFF ON OFF
Local Setpoint	Action with S2 no. 6 OFF Action with S2 no. 6 ON	Raise/Lower Raise/Lower
	3-Term Control output (pin 32)	Computed 3-term value

TABLE 3.5.2 6360 AUTO mode operating characteristics

3.5 Automatic Mode (Local Setpoint)

3.5.1 Auto Mode Entry Conditions

Fig 3.1 illustrates how a 6360 Process Controller may be operated within a closed-loop control system to function as a conventional 3-Term Controller. For closed-loop operation the 6360 must be operating in the AUTO mode in this configuration and Table 3.5.1 shows that the conditions necessary to achieve this are as follows:-

a) The $\overline{\text{HOLD}}$ ENABLE input must be at 15V.

b) The TRACK ENABLE input must be at 0V.

c) The AUTO mode (A) push-button must have been pressed.

When all these conditions are true the Controller will be in the AUTO mode which is thus the fifth highest priority mode. In this state the following Front-panel indications and rear connector logic signals apply:-

a) The green Auto Mode (A) push-button LED is illuminated.

b) The $\overline{\text{REMOTE AUTO/RATIO}}$ STATUS logic output, pin 20, is at 15V.

c) The $\overline{\text{HOLD + MANUAL}}$ STATUS logic output, pin 21, is at 15V.

3.5.2 Auto Mode Operating Characteristics

When the 6360 Controller is operating in the Automatic closed-loop control mode, the Process Variable (PV) input is sampled at 36ms intervals by the CPU and converted to digital form. The resultant value of the (PV) is then compared with the Local Setpoint (SL) currently programmed into the Controller and used to form an Error signal (ER) if the Trim facility of Section 3.11 is not being used. This computed Error value is input to the 3-Term control algorithm by the CPU every time it is scheduled and this occurs at a fixed rate (TS) determined by the settings of the Integral (TI) and Derivative (TD) times. The 3-Term control algorithm then generates an output level (OP) which, when applied to the Process via the Output Actuator, acts upon the Process Variable in such a way as to make it equal to the Local Setpoint and so reduce the Error to zero. A more detailed description of the 3-Term control algorithm will be found in Section 3.12.

While operating in the AUTO mode the 6360 exhibits the following characteristics as well as those given in Table 3.5.2.

a) The 3-Term Control Output, pin 32, is generated by the 3-Term Control algorithm.

b) The 3-term Control Output level is displayed on the yellow horizontal bargraph in 10% steps from 0 to 100%.

c) The 3-Term Control Output level may be inspected as a 4 digit number in the range 0 to 99.99% on the digital readout by holding in the Auto Mode (A) push-button.

d) The Controller may be used to display a Measured Power signal derived from a Control Element as shown in Figure 3.1 and under these conditions operation is as described in Section 3.10.

e) The left-hand vertical bargraph will display the Process Variable (PV) as described in Section 3.4.4 b). In addition, when no push-buttons are held in the Front-panel digital readout will also display the Process Variable in Engineering units.

f) If an open-circuit condition is detected on the Channel 1 analogue input, the Controller will enter the FORCED MANUAL mode of Section 3.3 and operation will be as described in Section 3.3.2.

g) The 6360 will enter the high alarm condition if the Process Variable (PV) exceeds the High Absolute alarm level (HA), or if the Error (ER=PV-SP) exceeds the High Deviation Alarm level (HD). This will cause the Process Variable bargraph on the front-panel to flash, and the High Alarm logic output, pin 16, will fall to 0V as described in Section 2.4.5 a).

   Similarly, the low alarm condition is entered if the Process Variable (PV) falls below the Low Absolute alarm level (LA), or if the Error exceeds the Low Deviation alarm level (LD). This will again cause the Process Variable bargraph to flash and the Low Alarm logic output, pin 17, will fall to 0V as described in Section 2.4.5 b).

h) In certain Control loop configurations it may be required to invert the sense of the 3-Term output to compensate for an output actuator characteristic. In this case Switch no. 4 of switch bank S2 may be set to the ON position to select the Inverse Output operating mode as described in Section 2.3.2 b). In this Section it has been pointed out that the Output Bargraph and Digital readout will display the true 3-Term output as a percentage regardless of the setting of switch no. 4.

   The sense of the output display may be inverted (without affecting the control action) by setting switch no. 2 of switch bank S2 to the ON position. (See Section 2.3.2 b)).

The 3-Term Control algorithm continuously adjusts the Integral term so that transfer to any other control mode except TRACK (see Section 3.2.2) will occur in a bumpless and procedureless manner.

3.5.3 Local Setpoint Updating in Automatic Mode

The Resultant Setpoint (SP) is always displayed on the right-hand vertical bargraph as a percentage of the PV range 1L to 1H (see Section 4.8.3). In the AUTO mode, SP is the Local Setpoint value (SL) after any Trim has been applied as described in Section 3.11.

Switch number 6 of switch bank S2 has no effect on the Local Setpoint when the Controller is in AUTO as can be seen from Table 3.5.2. Also, the Local Setpoint can always be updated via either of the serial data links in this mode. When the Display Setpoint button (SP) is depressed the Front-panel digital readout displays the Local Setpoint and the Raise/Lower buttons can then be used to alter it in the same way as in MANUAL (see Section 3.4.3). When in AUTO, however, the Raise/Lower buttons can only operate on the Local Setpoint and are inhibited when the SP button is not held in. If by accident the Raise and Lower buttons are pressed simultaneously, then the Controller will inhibit both of them and put the Local Setpoint into a temporary Hold state as if neither were pressed.

3.5.4 Programming Parameters in Automatic Mode

In order that the 6360 Process Controller can function correctly in the AUTO mode, it must first have all the control loop parameters programmed as for the MANUAL mode sections 3.4.4 a), b) and c). Then in addition the following are required:-

a) 3-Term Control Algorithm Characteristics

If the Process Variable is likely to have superimposed noise then an input filter should be specified thus:-

IF - Input channel filter constant (see Section 4.6.2)

To characterise a particular control loop the following parameters must be entered:-

EL - Error Limit

The Error Limit parameter is used to control the amount of overshoot exhibited by a particular system as described in Section 4.6.1. When this facility for overshoot inhibition is not required, EL should be set to its maximum value of 99.99%.

XP - Proportional band constant (see Section 4.6.3). Setting XP=0 initiates ON/OFF control (see Section 3.13).

TI, TD - Integral and derivative time constants (see Section 4.6.4)

b) Alarm limits

Visible indication of the Process Variable exceeding the Absolute alarm limits, or of the Error exceeding the Deviation alarm limits can be obtained when the limit parameters are programmed appropriately:-

HA, LA - High and Low Absolute Alarm limits (see Section 4..5.3)

HD, LD - High and Low Deviation Alarm limits (see Section 4.5.4)

It should be noted that the High Alarm condition is the logical OR function of HA and HD and the Low alarm condition is the logical OR function of LA and LD. Thus if it is required to enable the Absolute alarms, HD and LD should both be set to the maximum positive PV span (i.e. 1H-1L). If it is required to enable the Deviation alarms, HA and LA should be set to maximum and minimum PV range respectively (i.e. 1H and 1L).

The current values of both the Absolute and Deviation Alarm Limits can be accessed via the front-panel bargraph displays as follows :-

(i) High Alarms (HA, HD)

If the Raise (▲) button is pressed alone then the High Absolute Alarm level (HA) is indicated on the left-hand PV bargraph by flashing the appropriate segment of the display. This allows a reading accuracy of 1%. At the same time the High Deviation Alarm level (HD) is indicated on the right-hand SP bargraph in the same manner. This level will move up and down the SP bargraph as the SL value is altered.

(ii) Low Alarms (LA, LD)

If the Lower (▼) button is pressed alone then the Low Absolute Alarm level (LA) is indicated on the left-hand PV bargraph, and the Low Deviation Alarm level (LD) is indicated on the right-hand SP bargraph, in the same manner as for the High Alarms.

It should be noted that because the bottom segment of each bargraph is permanently lit to indicate power on they will not flash to display a zero alarm level.

3.6 Remote Auto

3.6.1 Remote Auto Mode Entry Conditions

Fig 3.2 illustrates how a 6360 Process Controller may be operated as a conventional 3-Term Controller within a closed-loop control system but using an externally generated Setpoint. This configuration is termed REMOTE AUTO and Table 3.6.1 shows that the conditions necessary for this mode of operation are as follows:-

a) The $\overline{\text{HOLD}}$ ENABLE input must be at 15V.

b) The TRACK ENABLE input must be at 0V.

c) Switch no. 1 of switch bank S2 must be OFF.

d) The REMOTE SETPOINT ENABLE input must be at 15V (pin 29).

e) The REMOTE mode (R) push-button must have been pressed.

When all these conditions are true the Controller will be in the REMOTE AUTO mode which is the sixth highest priority mode. In this state the following Front-panel indications and rear connector logic signals are present:-

a) The green Remote mode (R) push-button LED is illuminated.

b) The $\overline{\text{REMOTE AUTO}}$ STATUS logic output, pin 20, is at 0V.

c) The $\overline{\text{HOLD + MANUAL}}$ STATUS logic output, pin 21, is at 15V.

3.6.2 Remote Auto Mode Operating Characteristics

Apart from the derivation of the Setpoint, the behaviour of the Controller in the REMOTE AUTO mode is virtually the same as in the local AUTO described in Section 3.5.2, and also given in Table 3.6.2:-

a) The 3-Term Control Output, pin 32, is generated by the 3-Term Control algorithm using the signal applied to the Channel 2 analogue input, as the Setpoint (SP) instead of the locally programmed value (SL).

b) The 3-term Control Output level is displayed on the yellow horizontal bargraph in 10% steps from 0 to 100%.

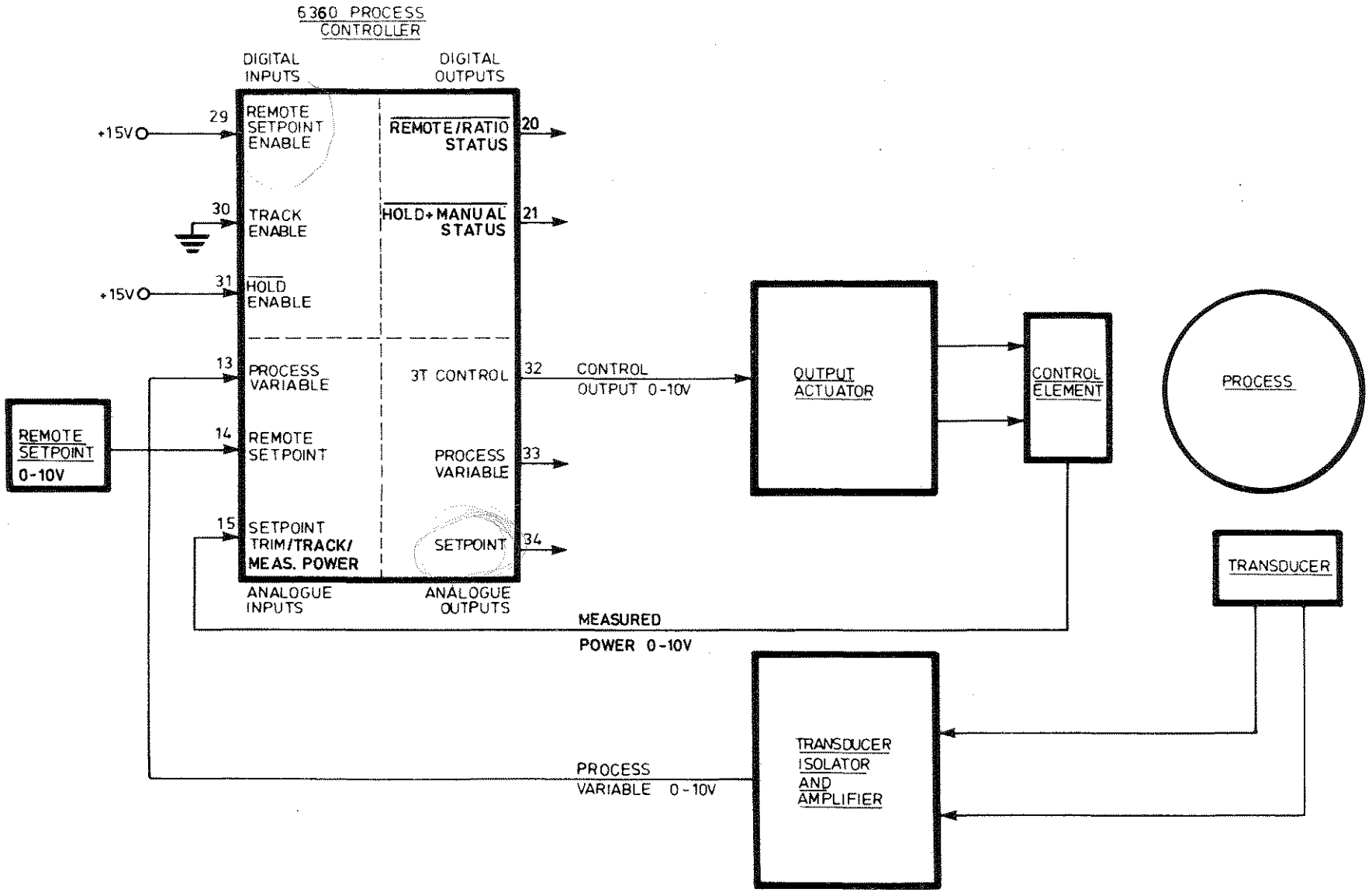

FIG 3·2 TYPICAL CONTROL LOOP CONFIGURATION FOR REMOTE AUTO MODE

c) The 3-Term Control Output level may be inspected as a 4 digit number in the range 0 to 99.99% on the digital readout by holding in the Remote Auto mode (R) push-button. The Raise/Lower buttons are inhibited from affecting the 3-Term output.

d) The Controller may be used to display a Measured Power signal derived from the Output Actuator shown in Figure 3.2 and under these conditions operation is as described in Section 3.10.

e) If an open-circuit is detected on the Channel 1 analogue input, the Controller will enter the FORCED MANUAL mode of Section 3.3 and operation will be as described in Section 3.3.2.

f) The left-hand vertical bargraph will display the Process Variable (PV) as described in Section 3.4.4 b). In addition when no push-buttons are held in the Front-panel digital readout will also display the Process Variable in Engineering Units.

g) High and Low Alarm conditions are indicated on the bargraph display and the rear connector logic outputs, as described in Section 3.5.2 g).

It should be noted that the 3-Term Control algorithm continuously adjusts the Integral term so that transfer to any other control mode except TRACK (see Section 3.2.2) will occur in a bumpless and procedureless manner. However, when in REMOTE, any step changes in the Remote Setpoint input (pin 14) will appear as step changes in the 3-Term Output level (OP) multiplied by the Proportional band (XP) gain factor. Protection against these rapid 3-Term output changes can be obtained by suitable choice of the Input Filter constant (IF) in those cases where the Remote Setpoint input is known to be a noisy signal.

When returning to Remote Auto care should be taken that the setpoint required is set to the same value as the existing control setpoint because reversion to this mode of operation is not bumpless.

CATEGORY			STATE
Logic inputs	$\overline{\text{HOLD}}$ enable TRACK enable REMOTE SETPOINT enable	(pin 31) (pin 30) (pin 29)	15V 0V 15V
Push-buttons	MANUAL AUTO REMOTE	(M) (A) (R)	OFF OFF ON
Status switches	Switch bank S2, switch no. 1		OFF

TABLE 3.6.1 6360 REMOTE AUTO mode entry conditions

CATEGORY			STATE
Logic outputs	$\overline{\text{REMOTE AUTO}}$ status $\overline{\text{HOLD + MANUAL}}$ status	(pin 20) (pin 21)	0V 15V
Status LEDs	HOLD LED TRACK LED		OFF OFF
Push-button LEDs	MANUAL AUTO REMOTE	(M) (A) (R)	OFF OFF ON
Local Setpoint	Action with S2 no. 6 OFF Action with S2 no. 6 ON		Remote value Remote value
	3-Term Control output	(pin 32)	Computed 3-term value

TABLE 3.6.2 6360 REMOTE AUTO mode operating characteristics

3.6.3 Setpoint Updating in the Remote Auto Mode

The Resultant Setpoint (SP) is always displayed on the right-hand vertical bargraph as a percentage of the SP range 1L to 1H (see Section 4.8.3). In the REMOTE AUTO mode, SP is the Remote Setpoint value after any Trim has been applied as described in Section 3.11.1.

When the 6360 is operating in REMOTE AUTO, the Setpoint is provided from an external source and effectively the Controller forces its Local Setpoint to follow the Remote Setpoint input for as long as it is in this mode. Consequently, the Raise/Lower buttons are permanently inhibited from altering the Local Setpoint regardless of the setting of switch no. 6 of switch bank S2, and updates via either of the serial data links are also not permitted. It is possible, however, to examine the Remote Setpoint level by depressing the Display Setpoint button which will cause the Resultant Setpoint (SP) to be indicated on the Front-panel digital readout as a 4 digit number.

3.6.4 Programming Parameters in the Remote Auto Mode

For the 6360 Process Controller to function correctly in the REMOTE AUTO mode it requires the same set of control loop parameters programmed as for the AUTO mode described in Section 3.5.4 a), b) and c). The only difference is that the Local Setpoint cannot be changed via the SL command mnemonic, but the Remote Setpoint (trimmed or untrimmed) can be inspected via the SP command.

CATEGORY			STATE
Logic inputs	$\overline{\text{HOLD}}$ enable TRACK enable RATIO enable	(pin 31) (pin 30) (pin 29)	15V 0V 15V
Push-buttons	MANUAL AUTO RATIO	(M) (A) (R)	OFF OFF ON
Status	Switch bank S2, switch no. 1		ON

TABLE 3.7.1 6360 RATIO mode entry conditions

CATEGORY			STATE
Logic outputs	$\overline{\text{RATIO}}$ status $\overline{\text{HOLD + MANUAL}}$ status	(pin 20) (pin 21)	0V 15V
Status LEDs	HOLD LED TRACK LED		OFF OFF
Push-button LEDs	MANUAL AUTO RATIO	(M) (A) (R)	OFF OFF ON
Local Setpoint	Action with S2 no. 6 OFF Action with S2 no. 6 ON		Tracks Ratio Setpoint Tracks Ratio Setpoint
	3-Term Control output	(pin 32)	Computed 3-term value

TABLE 3.7.2 6360 RATIO mode operating characteristics

3.7 Ratio Mode

Once a 6360 Controller has been primed for Ratio mode operation by setting switch no. 1 of switch bank S2 ON (see Section 2.3.2 b)), then the REMOTE AUTO mode of Section 3.6 is effectively replaced by the RATIO mode. To avoid confusion between these two operating modes, 4 of the 6360 rear connector signals are re-titled in the RATIO mode as follows:-

PIN NO	REMOTE AUTO MODE FUNCTION	RATIO MODE FUNCTION
14	Remote Setpoint input	Ratio Process Variable input
15	Setpoint Trim input	Ratio Trim input
20	$\overline{\text{REMOTE}}$ Status output	$\overline{\text{RATIO}}$ Status output
29	Remote Setpoint Enable input	Ratio Mode Enable input

In addition, the REMOTE AUTO (R) front-panel push-button is termed the RATIO mode button.

3.7.1 Ratio Mode entry Conditions

The RATIO mode has the same relationship to the other operating modes as REMOTE AUTO, and has the same priority level. Therefore it can be seen from Table 3.7.1 that the necessary conditions for Ratio operation are the same as for REMOTE AUTO, viz:-

a) The $\overline{\text{HOLD}}$ ENABLE input must be at 15V.

b) The TRACK ENABLE input must be at 0V.

c) Switch no. 1 of switch bank S2 must be ON.

d) The RATIO MODE ENABLE input must be at 15V (pin 29).

e) The RATIO mode (R) front-panel push-button must have been pressed.

When all these conditions are true the Controller will be in the RATIO mode which is the sixth highest priority operating mode (equal to REMOTE AUTO). In this state the following Front-panel indications and rear connector logic signals are present as can be seen from Table 3.7.2:-

a) The green Ratio mode (R) push-button LED is illuminated.

b) The $\overline{\text{RATIO}}$ STATUS logic output, pin 20, is at 0V.

c) The $\overline{\text{HOLD + MANUAL}}$ logic output, pin 21, is at 15V.

3.7.2 Ratio Mode Operating Characteristics

Apart from the derivation of the Setpoint, the behaviour of the Controller in the RATIO mode is virtually the same as in the local AUTO mode described in Section 3.5.2. This is illustrated in Table 3.7.2 viz:-

a) The 3-Term Control Output is generated by the Control algorithm using the Process Variable and the Ratio Process Variable as described in Section 3.7.3.

b) The 3-Term Control Output level is displayed on the yellow horizontal bargraph in 10% steps from 0 to 100%.

c) The 3-Term Control Output level may be inspected as a 4 digit number in the range 0 to 99.99% on the digital readout by holding in the Ratio mode (R) push-button. In this case the Raise/Lower buttons are inhibited from affecting the 3-Term Output.

d) The Controller may be used to display a Measured Power signal derived from a Control Element as shown in Figure 3.2 and under these conditions operation is as described in Section 3.10.

e) The left-hand vertical bargraph will display the Process Variable (PV) as described in Section 3.4.4 b). In addition when no push-buttons are held in the Front-panel digital readout will display the Process Variable in Engineering Units.

f) If an open-circuit is detected on the Channel 1 analogue input, the Controller will enter the forced MANUAL mode of Section 3.3 and operation will be as described in Section 3.3.2.

g) High and Low Alarm conditions are indicated on the Process Variable bargraph display and the rear connector logic outputs as described in Section 3.5.2 g).

When the Controller is operating in the RATIO mode, the Local Setpoint (SL) is disregarded and a new Ratio Setpoint (SP) is derived according to the following expression:-

$$\text{RATIO SETPOINT (SP)} = \frac{\text{RATIO PROCESS VARIABLE}}{\text{REQUIRED RATIO SETTING (RS)}}$$

It should be noted that the Control algorithm continuously adjusts the Integral term so that transfer to any other control mode except TRACK (see Section 3.2.2) will occur in a bumpless and procedureless manner.

3.7.3 Ratio Setpoint Derivation

It has been mentioned in Section 3.7.1 that the Ratio Setpoint is a function of the internal Ratio Setting (RS) and the Process Variable from the Primary Loop (Ratio Process Variable). The difference between the Ratio mode and normal operating modes and the derivation of their corresponding Setpoints is best illustrated by considering the following 4 cases.

a) Normal 3-Term Controller in MANUAL or AUTO Modes (A/M)

These conventional operating modes have been described previously in Sections 3.4 and 3.5 respectively. The derivation of the Resultant Setpoint (SP) can best be seen by reference to the simplified flow diagram of Fig 3.3. With switch no. 1 of switch bank S2 in the NORMAL position (i.e. OFF) the Trim input is scaled by the desired factor (3H, 3L) and used to trim the Local Setpoint (SL). This trimmed Local Setpoint is checked against the Setpoint limits (HS, LS) and then forms the Resultant Setpoint (SP). The Process Variable input is scaled to the operating range (1H, 1L) and this normalised value (PV) is then summed with the inverted Resultant Setpoint (-SP) to form the Error Signal (ER = PV-SP). This Error signal forms the input to the 3-Term Control Algorithm.

b) Ratio Controller in MANUAL or AUTO Modes (A/M)

When switch no. 1 of switch bank S2 is in the RATIO position (i.e. ON) it can be seen from Fig 3.3 that the Trim input only acts on the Ratio Setting Register (RS) and cannot affect the Local Setpoint (SL). Thus, under these conditions the Local Setpoint (SL) cannot be trimmed, and forms the Resultant Setpoint (SP) directly. It is then inverted and summed with the Process Variable (PV) to form the Error Signal (ER) as in a) above.

It should be noted that in this mode and prior to entering the RATIO mode the Ratio Setting Register (RS) may be inspected and updated via either of the serial data links.

c) Normal 3-Term Controller in REMOTE AUTO Mode (R)

Fig 3.3 shows that in this mode channel 2 serves as the Remote Setpoint input which is scaled to the same range as the Process Variable (1H, 1L). The Local Setpoint (SL) is forced to the Remote Setpoint value after limiting by HS and LS. Channel 3 becomes the Remote Setpoint Trim input and after scaling by 3H and 3L trims SL to produce the Resultant Setpoint (SP). This is then inverted and summed with the Process Variable to form the Error Signal (ER) as in a) above.

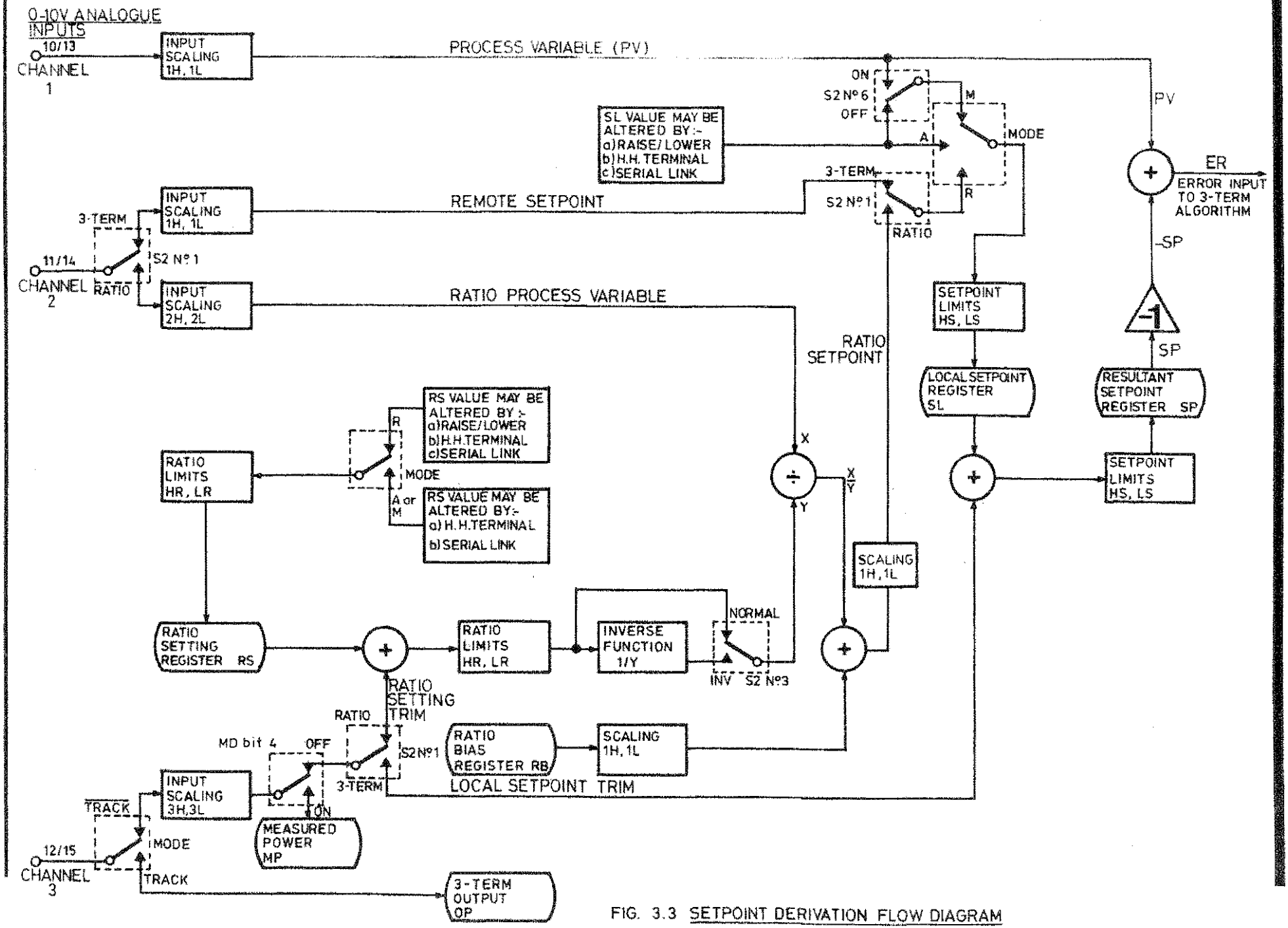

FIG. 3.3 SETPOINT DERIVATION FLOW DIAGRAM

d) Ratio Controller in RATIO Mode (R)

Fig 3.3 shows that in the RATIO mode, channel 3 serves as the Ratio Setting Trim input which is first scaled (3H, 3L) and then summed with the internal Ratio Setting Register (RS). The trimmed Ratio Setting is then limited to the required span (HR, LR) and fed either directly to the division function, or first routed through an Inverse Ratio function by switch no. 3 of switch bank S2.

The Ratio Process Variable from the Primary loop is input via channel 2 and first has to be scaled to the same range as the Process Variable of the Primary loop. This is done by setting 2H and 2L to the 1H and 1L values respectively of the Primary Controller. It is then divided by the output of S2 no. 3. At this stage, a Ratio Bias (RB) or Offset signal can be added in to the expression if required, but the Ratio Bias Register is first scaled to the range of the Process Variable (1L, 1H) to bring it to the same engineering units. This scaled Ratio Bias is summed with the expression to form the resultant Ratio Setpoint (SP). Finally the Ratio Setpoint (SP) is inverted and summed with the scaled Process Variable (1H, 1L) to form the Error Signal (ER = PV - SP).

Thus it can be seen from Fig 3.3 that the Resultant Ratio Setpoint can be expressed as one of two functions as follows:-

(i) Normal Ratio, (S2 no. 3 OFF)

RATIO SETPOINT (SP) =

$$\frac{\text{RATIO PROCESS VARIABLE}}{\text{RATIO SETTING (RS) + RATIO TRIM}} + \text{RATIO BIAS (RB)}$$

(ii) Inverse Ratio, (S2 no. 3 ON)

RATIO SETPOINT (SP) =

RATIO PV x [RATIO SETTING (RS) + RATIO TRIM]

+ RATIO BIAS (RB)

In Ratio mode the Ratio Setting, RS, may be inspected as a 4 digit number on the digital readout by holding in the SP push-button. This displayed value may then be altered by means of the Raise or Lower push-buttons provided that the SP button is held in at the same time. The Ratio Setting may also be updated via either of the serial data links. It takes approximately 30 seconds to change the value of RS the full range from LR to HR by means of the Raise/Lower push buttons.

DIGITAL INPUTS		MD STATUS WORD	SWITCHES	REMOTE /RATIO PUSH-BUTTON	SETPOINT TYPE ACTIVE	CHANNEL 3 INPUT FUNCTION	SETPOINT TRIM TYPE ACTIVE
TRACK MODE ENABLE Pin 30	REMOTE /RATIO ENABLE Pin 29	MEAS. POWER ENABLE MD bit 4	RATIO MODE ENABLE S2 no1				
0V	0V	LOW	OFF	X	Local (SL)	SL trim	Local
0V	15V	LOW	OFF	OFF	Local (SL)	SL trim	Local
0V	15V	LOW	OFF	ON	Remote	Remote trim	Remote
0V	0V	LOW	ON	X	Local (SL)	Ratio trim	None
0V	15V	LOW	ON	OFF	Local (SL)	Ratio trim	None
0V	15V	LOW	ON	ON	Ratio (RS)	Ratio trim	Ratio
0V	X	HIGH	X	X	X	Measured Power	None
15V	X	X	X	X	X	Track signal	None

TABLE 3.7.3 Truth Table for Setpoint and Trim derivations

KEY

X = don't care

Summary

The differences between Ratio mode operation (S2 no. 1 ON) and Normal mode operation (S2 no. 1 OFF) may be summarised as follows:-

a) Input pin 14 is used for the Ratio Process Variable.

b) The pin 15 Trim input only acts on the Ratio Setting.

c) The Local Setpoint cannot be trimmed even in AUTO or MANUAL.

These points above and the Flow diagram of Figure 3.3 may be illustrated in tabular form by means of Truth Table 3.7.3. This shows the derivation of the Setpoint and Setpoint Trim for all possible combinations of status switch bank S2 no. 1, the Track Enable and Remote Setpoint/Ratio Enable digital inputs, and MD status word.

3.7.4 Local Setpoint Updating in Ratio Mode

When the 6360 Controller is operating in RATIO mode, the resultant Ratio Setpoint (SP) is derived as described in Section 3.7.3 d), and this is always displayed on the right-hand vertical bargraph as a percentage of the full scale SP range 1L to 1H (see Section 4.8.3). Under these conditions the Local Setpoint (SL) is forced to track the Ratio Setpoint to ensure a bumpless tranfer if a higher priority operating mode, such as AUTO or MANUAL, is selected. It therefore follows that the Local Setpoint (SL) cannot be updated via the serial data links in RATIO though either may be used for monitoring its current value. In fact, the value of the Local Setpoint can only be ascertained via the serial data links because in RATIO the SP push-button displays the Ratio Setting (RS) as described in Section 3.7.3 d).

3.7.5 Programming Parameters in the Ratio Mode

For the 6360 Process Controller to function correctly in the RATIO mode it requires the same basic set of control loop parameters as for the AUTO mode described in Section 3.5.4 a) and b). It can be seen from the list of command mnemonics of Table 4.1, however, that a number of parameters change between the Normal 3-Term and Ratio operating modes (i.e. switch no. 1 of S2 OFF or ON). These changes can be categorised as follows:-

a) Command Parameters that are inserted in Ratio Mode

Table 4.1 shows that 6 command functions are inserted in the command list in the Ratio mode:-

(i) 2L, 2H - Ratio PV Low and High Ranges

These 2 command parameters define the range of the Ratio Process Variable input on pin 14 from the Primary loop. They are therefore identical with the 1H and 1L parameters programmed for the Primary loop Controller (see Section 4.2.2).

(ii) LR, HR - Ratio Setting Low and High Limits

These 2 command parameters are used to limit the range over which the Ratio Setting, RS, can be varied either by the front-panel push-buttons or the serial data links. If HR is set equal to LR then this locks RS to this value and inhibits it from being changed via the front-panel pushbuttons (see Section 4.5.1).

(iii) RS - Ratio Setting (see Section 4.7.2)

This command parameter is the actual Ratio Setting used by the Controller before trim or bias is added and is the value that appears on the digital readout when the SP button is depressed in Ratio mode. It can then be varied between the limits LR and HR as described in Section 3.7.3 d).

A full discussion on the selection of suitable values of RS is given in the System 6000 Controller Applications Handbook, Section 5.2.

(iv) RB - Ratio Bias (see Section 4.7.3)

This command parameter is a bipolar entry in the same engineering units as the Process Variable of the Ratio Controller. Thus, as can be seen from Fig 3.3, RB is scaled to lie within the range 1L to 1H of the Process Variable. The Ratio Bias value is added into the expression for the resultant Ratio Setpoint as described in Section 3.7.3 d).

b) Command Parameters that Change in Ratio Mode

The following command parameters of Table 4.1 change their functions between the normal 3-Term and Ratio operating modes:-

(i) DP - Decimal Point Position Selection

Digit B

In the normal 3-Term mode, Section 4.3.2 b) shows that the Channel 2 analogue input is allocated to the Remote Setpoint function and so digit B of the DP parameter is forced to the digit A value. However, in the Ratio mode the Channel 2 input of the Ratio Controller is the Primary or Ratio Process Variable input. It follows, therefore, that in this case the second digit should represent the decimal point position of the Process Variable of the Primary Controller, i.e.:-

RATIO CONTROLLER "DP" digit B =

PRIMARY CONTROLLER "DP" digit A

Digit C

Section 4.3.2 c) shows that digit C of the DP parameter is allocated to the Channel 3 input decimal point selection. Furthermore, in Ratio mode, provided a Measured Power display has not been selected as in Section 4.3.2 c) (ii), the Channel 3 input is allocated to the Ratio Setting Trim function. In this case Channel 3 has the same decimal point position as that calculated for the RS setting. Section 4.3.2 d) shows that this calculated position is always displayed in the digit D position, so it follows that in this case digit C of the DP parameter will take up the same value as digit D.

(ii) IC - Input Channel Processing Routine Linkage

Digit B

In the normal 3-Term mode, Section 4.3.3 shows that digit B of the IC parameter links the Channel 2 Remote Setpoint input to one of the processing functions listed in Table 4.3. In this case the linearisation span is the same as for the Process Variable, i.e. 1L to 1H. However, in the Ratio mode the Channel 2 input of the Ratio Controller is allocated to the Primary or Ratio Process Variable function. It follows that if this input is to be linearised, for example, then the range over which this should occur is that of the Primary Process Variable and not the Process Variable of the Ratio Controller. Thus, in Ratio mode the linearisation selected by digit B of the IC parameter is performed over the range 2L to 2H and not 1L to 1H.

Digit C

Section 4.3.3 shows that digit C of the IC parameter links the Channel 3 input to one of the processing functions listed in Table 4.3. In the Ratio mode the Channel 3 input of the Ratio Controller is allocated to the Ratio Setting Trim function. Thus, the linearisation selected by digit C of the IC parameter is performed over the range specified by 3L and 3H.

(iii) 3L, 3H - Ratio Trim Low and High Ranges (see Section 4.4.3 c))

Section 3.11.1 shows that the Local Setpoint, SL, can be trimmed by applying an external analogue signal to the Channel 3 input and programming the ranging parameters 3L and 3H appropriately. In the Ratio Control mode the Channel 3 input is used for the Ratio Setting Trim function and the ranging parameters 3L and 3H are used in a similar manner as discussed in Section 3.11.2.

(iv) SL - Local Setpoint (see Section 4.7.1)

In the RATIO mode this is a monitor-only parameter as it is forced to track the Ratio Setpoint as described in Section 3.7.4. Furthermore it cannot be displayed on the Front-panel in this mode.

(v) SP - Resultant Ratio Setpoint (see Section 4.8.3)

This is also a monitor-only parameter in the RATIO mode and is derived from one of the two expressions given in Section 3.7.3 d) depending upon the setting of the Inverse Ratio select switch, S2 no. 3.

3.8 Auto Fall-Back Mode (from REMOTE AUTO)

3.8.1 Auto Fall-Back Mode Entry Conditions

A 6360 Process Controller will revert to the AUTO FALL-BACK mode from the REMOTE AUTO mode as described in Section 3.6.1 when the REMOTE SETPOINT ENABLE input changes from 15V back to 0V. Table 3.8.1 lists the conditions necessary for operation in the AUTO FALL-BACK mode thus:-

a) The $\overline{\text{HOLD}}$ ENABLE input must be at 15V.

b) The TRACK ENABLE input must be at 0V.

c) Switch no. 1 of switch bank S2 must be OFF.

d) The REMOTE SETPOINT ENABLE input must be at 0V.

e) The REMOTE mode (R) push-button must have been pressed.

When all these conditions are true the Controller is in the AUTO FALL-BACK mode which is the lowest priority mode. In this state the following Front-panel indications and rear connector logic signals are operative:-

a) The green Auto mode (A) push-button LED flashes continuously.

b) The $\overline{\text{REMOTE AUTO}}$ STATUS logic output, pin 20, is at 15V.

c) The $\overline{\text{HOLD + MANUAL}}$ logic output, pin 21, is at 15V.

3.8.2 Auto Fall-Back Mode Operating Characteristics

It can be seen from Table 3.8.2 that the AUTO FALL-BACK mode operating characteristics are identical to AUTO. Thus the Control Output level, Error and Process Variable are displayed exactly as in AUTO (see Section 3.5.2) and the Raise/Lower buttons are inhibited from changing the output level. The only difference between the AUTO and AUTO FALL-BACK modes is that the Auto mode (A) LED is flashing to inform an operator that the Controller is still primed for REMOTE AUTO operation. Hence, the Controller reverts to REMOTE AUTO mode as soon as the REMOTE SETPOINT ENABLE input returns to 15V. In this event the Auto mode (A) LED is extinguished and the Remote mode (R) LED is illuminated as in Section 3.6.1. The AUTO FALL-BACK mode can be overriden by selecting any operating mode with a higher priority than REMOTE AUTO, such as AUTO. In this case the Auto Mode (A) LED goes steady and operation is as described in Section 3.5. It should be noted that just as a transfer from AUTO to any other mode except TRACK occurs in a bumpless, procedureless manner as described in Section 3.5.2, so is a transfer from the AUTO FALL-BACK mode.

CATEGORY			STATE
Logic inputs	$\overline{\text{HOLD}}$ enable	(pin 31)	15V
	TRACK enable	(pin 30)	0V
	REMOTE SETPOINT enable	(pin 29)	0V
Push-buttons	MANUAL	(M)	OFF
	AUTO	(A)	OFF
	REMOTE	(R)	ON
Status	Switch bank S2, switch no. 1		OFF

TABLE 3.8.1 6360 AUTO FALL-BACK mode entry conditions (from REMOTE AUTO)

CATEGORY			STATE
Logic outputs	$\overline{\text{REMOTE AUTO}}$ status	(pin 20)	15V
	$\overline{\text{HOLD + MANUAL}}$ status	(pin 21)	15V
Status LEDs	HOLD LED		OFF
	TRACK LED		OFF
Push-button LEDs	MANUAL	(M)	OFF
	AUTO	(A)	FLASH
	REMOTE	(R)	OFF
Local Setpoint	Action with S2 no. 6 OFF		Raise/Lower
	Action with S2 no. 6 ON		Raise/Lower
	3-Term Control output	(pin 32)	Computed 3-term value

TABLE 3.8.2 6360 AUTO FALL-BACK mode operating characteristics (from REMOTE AUTO)

3.8.3 Local Setpoint Updating in Auto Fall-Back Mode

Control of the Local Setpoint in the Auto Fall-back mode is identical to that for the AUTO mode as described in Section 3.5.3. It should be noted, however, that when the Auto Fall-back mode is first entered the Local Setpoint will take up the last value that the Remote Setpoint had, just prior to the changeover from REMOTE.

3.8.4 Programming Parameters in Auto Fall-Back Mode

Since the operating mode for a Controller in AUTO FALL-BACK is the same as for AUTO it follows that the same set of control loop parameters must be programmed as for AUTO and these are listed in Section 3.5.4 a) and b).

CATEGORY			STATE
Logic inputs	$\overline{\text{HOLD}}$ enable TRACK enable RATIO enable	(pin 31) (pin 30) (pin 29)	15V 0V 0V
Push-buttons	MANUAL AUTO RATIO	(M) (A) (R)	OFF OFF ON
Status	Switch bank S2, switch no. 1		ON

TABLE 3.9.1 6360 AUTO FALL-BACK mode entry conditions (from RATIO)

CATEGORY			STATE
Logic outputs	$\overline{\text{RATIO}}$ status $\overline{\text{HOLD + MANUAL}}$ status	(pin 20) (pin 21)	15V 15V
Status LEDs	HOLD LED TRACK LED		OFF OFF
Push-button LEDs	MANUAL AUTO RATIO	(M) (A) (R)	OFF FLASH OFF
Local Setpoint	Action with S2 no. 6 OFF Action with S2 no. 6 ON		Raise/Lower Raise/Lower
	3-Term Control output	(pin 32)	Computed 3-term value

TABLE 3.9.2 6360 AUTO FALL-BACK mode operating characteristics (from RATIO)

3.9 Auto Fall-Back Mode (from RATIO)

3.9.1 Auto Fall-Back Mode Entry Conditions

A 6360 Process Controller will revert to the AUTO FALL-BACK mode from the RATIO mode as described in Section 3.7.2 when the RATIO MODE ENABLE input changes from 15V back to 0V. Table 3.9.1 lists the conditions necessary for operation in the AUTO FALL-BACK mode thus:-

a) The $\overline{\text{HOLD}}$ ENABLE input must be at 15V.

b) The TRACK ENABLE input must be at 0V.

c) Switch no. 1 of switch bank S2 must be ON.

d) The RATIO MODE ENABLE input must be at 0V (pin 29).

e) The RATIO (R) mode front-panel push-button must have been pressed.

When all these conditions are true the Controller is in the AUTO FALL-BACK mode which is the lowest priority mode. In this state the following Front-panel indications and rear connector logic signals are operative:-

a) The green Auto mode (A) push-button LED flashes continuously.

b) The $\overline{\text{RATIO}}$ STATUS logic output, pin 20, is at 15V.

c) The $\overline{\text{HOLD + MANUAL}}$ STATUS logic output, pin 21, is at 15V.

3.9.2 Auto Fall-Back Mode Operating Characteristics

It can be seen from Table 3.9.2 that the AUTO FALL-BACK mode operating characteristics are identical to AUTO. Thus the Control Output level, Setpoint and Process Variable are displayed exactly as in AUTO (see Section 3.5.2) and the Raise/Lower buttons are inhibited from changing the output level. The only difference between the AUTO mode of Section 3.7.4 c) and the AUTO FALL-BACK mode is that the Auto mode (A) LED is flashing to inform an operator that the Controller is still primed for RATIO operation. Hence, the Controller reverts to RATIO mode as soon as the RATIO MODE ENABLE input returns to 15V. In this event the Auto mode (A) LED is extinguished and the RATIO mode (R) LED is illuminated as in Section 3.7.2. The AUTO FALL-BACK mode can be overridden by selecting any operating mode with a higher priority than RATIO such as AUTO. In this case the Auto Mode (A) LED goes steady and operation is as described in Section 3.7.4 c). It should be noted that just as a transfer from AUTO to any other mode except TRACK occurs in a bumpless, procedureless manner as described in Section 3.5.2, so is a transfer from the AUTO FALL-BACK mode.

3.9.3 Local Setpoint Updating in Auto Fall-Back Mode

Control of the Local Setpoint in AUTO FALL-BACK mode is identical to that for the AUTO mode as described in Section 3.7.3 b). However, when the AUTO FALL-BACK mode is first entered the Local Setpoint will take up the last value that the Ratio Setpoint had just prior to the changeover from RATIO. It is recommended for this reason that the WATCHDOG Output (pin 9) of the Primary Loop Controller is connected to the RATIO MODE ENABLE input (pin 29) of the Secondary (Ratio) Loop Controller. Thus, if for any reason the Primary Controller malfunctions and its Watchdog output drops to 0V, then the Ratio Controller will be forced into the AUTO FALL-BACK mode in a bumpless manner with visible indication to an operator.

3.9.4 Programming Parameters in Auto Fall-Back Mode

Since the operating mode for a Controller in AUTO FALL-BACK is the same as for the AUTO mode described in Section 3.7.3 b), it follows that the same set of control loop parameters must be programmed as for AUTO and these are discussed in Section 3.7.5.

3.10 Measured Power Display

In certain control loop configurations an Operator requires the ability to display a true Measured Power signal derived from the Output Actuator rather than the normal 3-Term Output from the 6360 Controller. In a temperature control loop, for example, the 6360 may be driving a 60A phase-angle fired Thyristor stack to control a heating element. The 6360 3-Term output is a 0-10V signal which may be displayed as a 4-digit number representing 0-100% of output as described in Section 3.3.2. Also, this output signal is permanently displayed on the horizontal bargraph in 10% steps from 0 to 100%. However the Thyristor stack is really driving a current of from 0 to 60A rms into the heating element and it is this output signal that the Operator may actually like to see. To cater for this requirement the 6360 has the facility to display a Measured Power signal ranged in its own engineering units instead of the normal 3-Term output. This facility is enabled by setting bit 4 of the MD status word high (as described in Section 2.3.2 b). The Channel 3 analogue input is then used for the Measured Power signal connection as described in Section 2.4.2 c) (iv).

3.10.1 Programming Command Parameters

In order to display the Measured Power signal with the correct ranging, decimal point positioning and signal processing, it is necessary to programme the following command parameters :-

a) DP - Decimal Point Position

The decimal point position for the Measured Power display is programmed by means of the third digit of the DP command parameter as described in Section 4.3.2 c) (iii).

b) IC - Input Channel Processing Routine

If the 0-10V Measured Power signal is not linear but requires some form of processing such as square root extraction, then this can be specified by means of the third digit of the IC command parameter as described in Section 4.3.3 a).

c) 3L, 3H - Measured Power Low and High Ranges

The Measured Power signal is displayed in the correct engineering units by programming the 3L and 3H command parameters to the Low and High range values of the signal as described in Section 4.4.3 d).

MD bit 4	FRONT-PANEL PUSH-BUTTONS			FRONT-PANEL DISPLAYS		OPERATOR ACTION
	MANUAL (M)	RAISE (▲)	LOWER (▼)	HORIZONTAL BARGRAPH	4-DIGIT READOUT	
LOW	OFF	X	X	3-Term Output	Process Variable	
LOW	ON	OFF	OFF	3-Term Output	3-Term Output	
LOW	ON	ON	OFF	3-Term Output	3-Term Output	Raise 3-Term Output
LOW	ON	OFF	ON	3-Term Output	3-Term Output	Lower 3-Term Output
HIGH	OFF	X	X	Measured Power	Process Variable	
HIGH	ON	OFF	OFF	3-Term Output	Measured Power	
HIGH	ON	ON	OFF	3-Term Output	Measured Power	Raise Meas. Power
HIGH	ON	OFF	ON	3-Term Output	Measured Power	Lower Meas. Power

TABLE 3.10 Summary of Measured Power Display operating characteristics

KEY

X = don't care

For example, if a 0-10V signal represented a true Measured Power range of 0-60A rms then the correct display would be obtained by programming the following command parameters:-

DP > 0020
IC > 0000
3H = 60.00
3L = 00.00

The true Measured Power value could then be accessed via the 8260 Hand-held terminal or the supervisory data link using the MP command as listed in Table 4.1, e.g. MP = 23.45.

3.10.2 Measured Power Display Operating Characteristics

Table 3.10 summarises the effects the front-panel push-buttons have on the front-panel displays in the normal mode (MD bit 4 low) or in the Measured Power display mode (MD bit 4 high) and these are as follows:-

a) MD bit 4 LOW

It can be seen from Table 3.10 that in this case the Controller exhibits the following characteristics:

(i) The 3-Term Control output level is always displayed on the yellow horizontal bargraph in 10% steps from 0 to 100%.

(ii) When no push-buttons are held in the Front-panel digital readout displays the Process Variable in Engineering Units.

(iii) When the Manual mode (M) push-button is pressed the 4 digit readout displays the 3-Term Control output as a number in the range 0 to 99.99%.

(iv) When the Manual mode (M) push-button is held in the 3-Term Control output level can be altered by means of the Raise (▲) or Lower (▼) push-buttons as described in Section 3.3.2.

(v) The 3-Term Control output can also be displayed as a 4 digit number on the digital readout by pressing the Auto (A) or Remote/Ratio (R) push-buttons. When these buttons are held in, however, the Raise/Lower buttons are inhibited from altering the level of the 3-Term output.

b) MD bit 4 HIGH

It can be seen from Table 3.10 that in this case the Controller exhibits the following characteristics:

(i) When no push-buttons are held in the Measured Power signal is displayed on the yellow horizontal bargraph in 10% steps from 0 to 100% representing the signal range of 0 to 10V.

(ii) When no push-buttons are held in the Front-panel digital readout displays the Process Variable in Engineering Units.

(iii) When the Manual mode (M) push-button is pressed the 4 digit readout displays the Measured Power signal in Engineering Units with the decimal point positioned appropriately. The yellow horizontal bargaph, however, reverts to displaying the 3-Term Control Output level in 10% steps from 0 to 100%.

(iv) When the Manual mode (M) push-button is held in the 3-Term Output level can be altered by means of the Raise/Lower buttons as described in Section 3.3.2, while the operator observes the Measured Power signal on the digital readout display. The yellow horizontal bargraph still displays the 3-Term output level as in (iii) above as long as the Manual button is held in. This facility allows an operator to access the 3-Term output level without changing the setting of MD bit 4 if the Measured Power analogue input signal is interrupted under fault conditions.

(v) The Measured Power signal can also be displayed on the digital readout in Engineering Units by pressing the Auto (A) or Remote/Ratio (R) push-buttons. When these buttons are held in, however, the Raise/Lower buttons are inhibited from altering the level of the 3-Term output level. The yellow horizontal bargraph will also revert to displaying the 3-Term Control Output level under these conditions.

It should be noted that the display of the Local Setpoint (SL) value on the digital readout as described in Section 3.3.3 is unaffected by having MD bit 4 high.

3.11 Trim

Section 2.4.2 c) shows that when the 6360 Controller is not in the TRACK mode and a Measured Power display has not been selected (i.e. MD bit 4 is low) then the channel 3 analogue input is used for the Trim function. The exact operating mode of the Controller determines whether the Trim function is applied to the Local or Remote Setpoints or the Ratio Setting.

3.11.1 Setpoint Trim

When the 6360 Controller is operating in the normal 3-Term mode, i.e. S2 no. 1 is OFF, the channel 3 analogue input is used for the Local or Remote Setpoint Trim function. If the 6360 is operating in the HOLD, FORCED MANUAL, MANUAL, AUTO, or AUTO FALL-BACK modes then the Local Setpoint (SL) is trimmed. If the 6360 is operating in the REMOTE mode then the Remote Setpoint is trimmed. The effect that the 0-10V Trim signal has on the Local Setpoint is programmed by means of the two Channel 3 ranging parameters of Table 4.1:-

3L - Setpoint Trim low range
3H - Setpoint Trim high range

It can be seen from Section 4.4.3 b) that these two parameters are entered directly in Engineering Units so that for a 0V Trim input the value of 3L is added to the Local Setpoint, while 3H is added to it when the Channel 3 input is at 10V. In general, the Resultant Setpoint may be calculated from the following expression:-

RESULTANT SETPOINT (SP) = LOCAL SETPOINT (SL)

+ (NORMALISED TRIM SIGNAL x TRIM SPAN)

+ TRIM LOW RANGE

i.e. :-

$$SP = SL + \frac{\text{TRIM VOLTAGE}}{10}(3H - 3L) + 3L$$

This expression assumes a linear Channel 3 input (see Section 4.3.3) and the Resultant Trimmed Setpoint value is always displayed on the right-hand vertical bargraph and may also be accessed via the SP command parameter for monitoring purposes only (see Section 4.8.3). It can be seen from this expression that the Setpoint Trim facility can be inhibited by setting both the 3L and 3H parameters to zero.

The effect that the Trim input has on the Local Setpoint can best be illustrated by means of the following 3 examples:-

a) Symmetrical Trim - Elevated Zero

Assume that the 6360 has been programmed with the following parameters:-

SL = +5000 (PV range 1L to 1H = 0 to 9999)
3H = +0500
3L = -0500

The Channel 3 Setpoint Trim input signal will affect the Resultant Setpoint as follows:-

TRIM INPUT	RESULTANT SETPOINT (SP)
0V	4500
5V	5000
10V	5500

b) Asymmetric Trim - Elevated Zero

Assume in this case:-

SL = +5000
3H = +1000
3L = -0500

Then :-

TRIM INPUT	RESULTANT SETPOINT (SP)
0V	4500
5V	5250
10V	6000

c) Asymmetric Trim - Suppressed Zero

Assume in this case:-

SL = +5000
3H = +1000
3L = +0500

Then :-

TRIM INPUT	RESULTANT SETPOINT (SP)
0V	5500
5V	5750
10V	6000

It should be noted that the above examples of Local Setpoint Trim operate in the same way on the Remote Setpoint.

3.11.2 Ratio Setting Trim

When the Controller is operating in RATIO mode, i.e. S2 no. 1 ON, the channel 3 analogue input is used for the Ratio Setting Trim function. The effect that the 0-10V Trim signal has on the Ratio Setting is still programmed by means of the channel 3 ranging parameters 3L and 3H. The expression given in Section 3.11.1 is modified in the Ratio Control mode to give the Resultant Ratio Setting, RS', as follows :-

$$RS' = RS + \frac{\text{TRIM VOLTAGE}}{10}(3H - 3L) + 3L$$

It should be noted that the decimal point positions for the 3L and 3H parameters always follow that calculated for the RS parameter as discussed in Section 3.7.5 b) (i).

The effect that the trim input has on the Ratio Setting can best be illustrated by means of the following example:-

Assume that the 6360 has been programmed with the following parameters:-

RS = +5.000 (RS calculated range 0 to 9.999)
3H = +0.500
3L = -0.500

The Channel 3 Ratio Setting Trim input signal will affect the Resultant Ratio Setting as follows:-

TRIM INPUT	RESULTANT RATIO SETTING (RS')
0V	4.500
5V	5.000
10V	5.500

It can be seen that with large settings of the Trim span 3L to 3H the Ratio Setting RS can be trimmed over its full range. Thus, because of the great dynamic range of the Ratio Setting, i.e. typically 10,000 to 1, great care must be taken when using the Ratio Trim facility. In the above example the Trim span selected allows RS to be varied by ±10% which may be excessive in certain applications. To further safeguard against large excursions of the Ratio Setting when Trim is applied it is recommended that the Low and High Ratio Setting Limit parameters, LR and HR, are used and programmed with carefully selected values.

3.12 6360 3-Term Control algorithm

3.12.1 Analogue 3-Term Control equation

Conventional analogue controllers implement the classical 3-Term (PID) control equation using operational amplifier techniques. This equation is usually written as follows:-

$$OP = \frac{-100}{XP}\left(ER + \frac{1}{TI}\int ER\,dt + TD\,\frac{dER}{dt}\right) \qquad (1)$$

where:-

OP = Controller Output
XP = Proportional band
TI = Integral time constant
TD = Derivative time constant
ER = Error (PV - SP)

This equation may be rewritten in the Y(s) terminology of the Laplace transformation thus:-

$$\frac{OP(s)}{ER} = \frac{-100}{XP}\left(1 + \frac{1}{sTI} + sTD\right) \qquad (2)$$

Limiting of the high frequency response introduces a digital limit filter, typically chosen to have a time constant equal to a quarter of the derivative time. The complete transfer function is then:-

$$\frac{OP(s)}{ER} = \frac{-100}{XP}\left(1 + \frac{1}{sTI} + sTD\right)\left(\frac{1}{1 + sTD/4}\right) \qquad (3)$$

3.12.2 Digital Control algorithm

In microprocessor-based Controllers like the 6360 it is necessary to use sampling techniques for the calculation of the various terms of the control equation. It is also more convenient to rewrite the transfer function in terms of difference equations rather than the Y(s) Laplace transform terminology. Thus the 3-Term calculated output after n samples is given by:-

$$OPn = \frac{-100}{XP} \left[ERn + \frac{TS}{TI} \sum_{1}^{n} ERr + \frac{TD}{TS} \Delta PV \right] + 50\% \qquad (4)$$

where:-

OP = Controller Output after n samples
XP = Proportional band
TI = Integral time constant
TD = Derivative time constant
ERn = Value of Error term after Error limit has been applied (see Section 4.6.1)
ERr = Value of Error at sample r = PVr - SP (see Section 4.8.5)
ΔPV = Change in Process Variable value between current and previous sample

PV is obtained after first order filtering with an effective time constant TD/4 thus:-

$$\Delta PVn = \Delta PVn-1 + \frac{4TS}{TD} (dN - \Delta PVn-1) \qquad (5)$$

where:- dN = PVn - PVn-1

The Process Variable PV is itself a filtered version of the sampled channel 1 analogue input value, MV thus:-

$$PVn = PVn-1 + \frac{TF}{IF} (MVn - PVn-1) \qquad (6)$$

where:-

TF = effective first order time constant
IF = input channel filter constant (see Section 4.6.2)

NOTE

The 50% offset is apparent at zero error under proportional - only control action with the integral term disabled by setting TI = 0. Although this allows the output to respond to both positive and negative errors it has the disadvantage that stability may occur about an undesirable operating point. It is usually better to set a very long integral time which has an effect equivalent to Manual reset.

3.12.3 Equivalence between analogue and digital equations

When the Setpoint is constant the digital algorithm of equation (4) may be written as the following equivalent continuous transfer function:-

$$\frac{OP(s)}{ER} = \frac{-100}{XP}\left[1 + \frac{1}{sTI} + \frac{sTD}{1+sTD/4}\right] \qquad (7)$$

This can now be compared with the classical Y(s) version of the analogue controller shown in equation (2) where it can be seen that the Proportional (P) and Integral (I) Terms are identical. The Derivative (D) Term is slightly modified however due to the additional first order filtering applied to the derivative value PV, rather than to the error directly.

It should be noted that the response to Local Setpoint (SL) changes is determined by the position of switch no. 1 of switch bank S1 as described in Section 2.3.2 a).

For further descriptions of the 3-Term Algorithm, Integral Desaturation and Error Limit refer to Section 3 of the System 6000 Controller Applications Handbook.

3.13 ON/OFF Control

The 6360 can be operated as a simple ON/OFF Controller in those applications where the facilities of full 3-term control are not required. The ON/OFF control action will operate in all the 6360 closed-loop operating modes, i.e. AUTO, REMOTE AUTO, RATIO or AUTO FALL-BACK.

3.13.1 Programming Parameters for ON/OFF Control

Only 3 parameters are affected by ON/OFF control as follows:-

a) XP - Proportional Band Constant

The XP parameter is used to select the ON/OFF control action as follows:-

XP = 000.0 - ON/OFF control action

XP = 000.1 to 999.9 - 3-term control action

b) TI - Integral Time Constant

When ON/OFF control action has been selected by setting XP = 0, the TI parameter is used to define the deadband expressed as a percentage of the PV span of 1L to 1H.

c) OP - Control Output

When ON/OFF control action has been selected by setting XP = 0, the Control Output parameter, OP, can only take up one of two possible states as follows:-

Controller OFF:- OP = LO

Controller ON :- OP = HO

3.13.2 ON/OFF Control Operating Characteristics

The action of the 6360 in the ON/OFF control mode can be described by the expressions below:-

Controller OFF (OP = LO) when PV > SP

Controller ON (OP = HO) when PV < SP - Deadband (TI)

In inverse control action is selected by setting S2 no. 4 ON then the expressions are modified thus:-

Controller OFF (OP = LO) when PV < SP - Deadband (TI)

Controller ON (OP = HO) when PV > SP

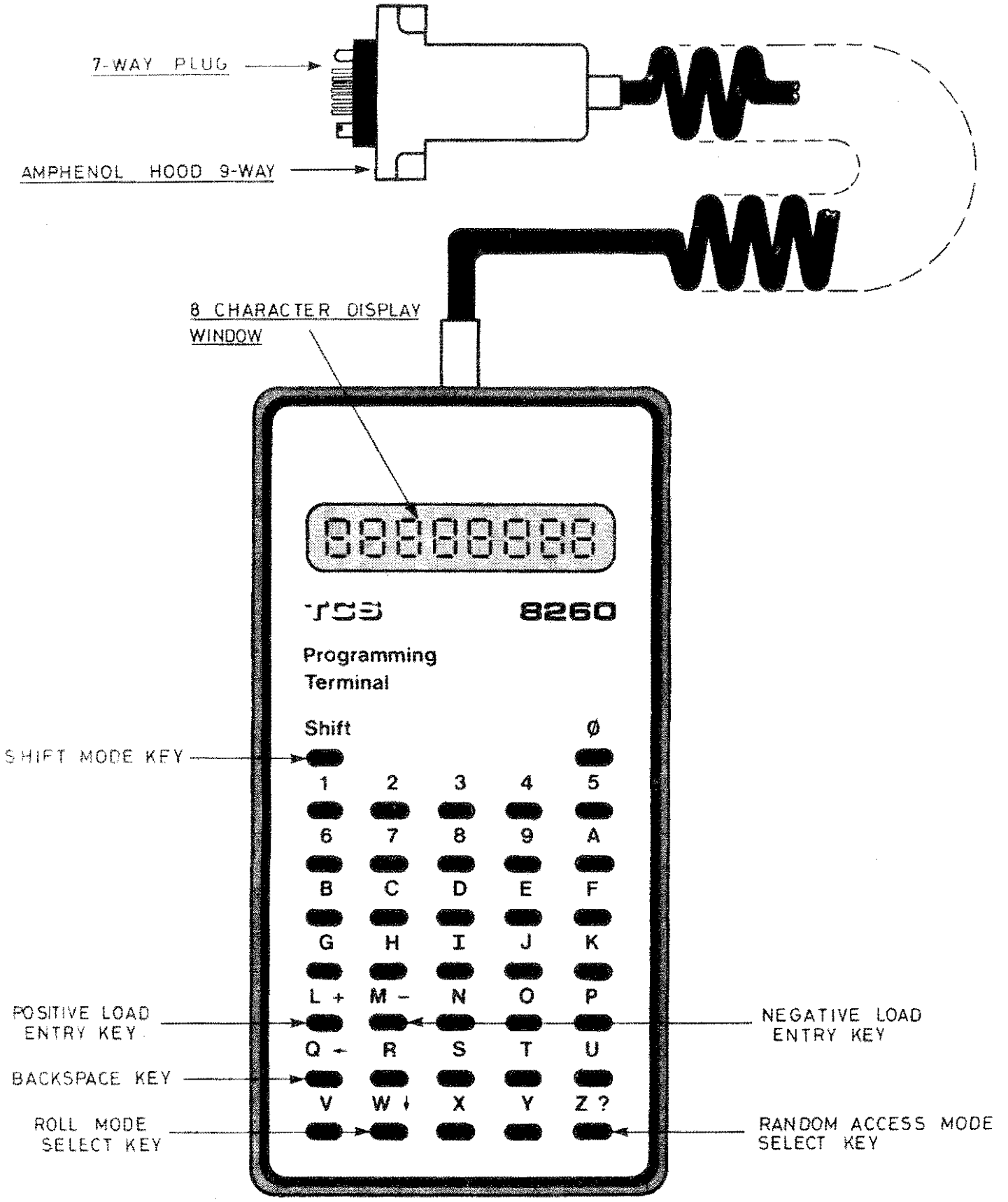

FIG 4.1) HAND-HELD TERMINAL KEYBOARD LAYOUT

Section 4 Programming the 6360 Process Controller via the 8260 Hand-held terminal

4.1 Programming Terminal Characteristics

The 8260 Hand-held programming terminal is a device the same size as a pocket calculator. It is provided with a 37-key positive tactile response keyboard and is capable of sending and receiving data in eight bit serial ASCII code.

The terminal has a simultaneous display capacity of eight characters in-line on 16-segment "starburst" LEDs which can clearly and legibly generate all 64 ASCII upper case alphanumerics and symbols. When it is being used to enter parameters into the 6360 Process Controller though, only the first 7 character positions are used starting from the left-hand end of the display. These 7 characters include the decimal point position so that a typical message would have the following structure:-

S	L	3	4	.	5	6

The interface between the terminal and the Controller is at standard RS232/V24 voltage levels using a transmission rate of 300 baud and 10 bit characters as defined in Section 1.5.9 A. Connection to the Controller is via a 7-pin plug and socket arrangement, the socket being situated behind a small door just above the catch handle on the front panel of the Controller. This 7-pin connector is also used to provide power to the terminal from the +5V supply within the Controller and it requires typically 350mA.

A plan view of the keyboard of the 8260 Hand-held terminal is given in Fig 4.1, and for a more detailed description of its characteristics refer to Section 2 of the System 6000 Communications Handbook.

CMD MNE-MONIC	COMMAND PARAMETER FUNCTION	UNITS	FORMAT	DP CHAR POSN	PARAMETER TYPE
II	Instrument identity	-	5	-	
DP	Decimal point position	-	5	-	Status
IC	Input channel processing and push-button disable	-	5	-	words
1H	Process Variable high range	Eng	1	A	CH1
1L	Process Variable low range	Eng	1	A	Input
2H(1)	Ratio PV high range	Eng	1	B	CH2 channel
2L(1)	Ratio PV low range	Eng	1	B	ranging
3H	Trim/Meas. Power high range	Eng	1	C	CH3
3L	Trim/Meas. power low range	Eng	1	C	
HR(1)	Ratio Setting high limit	-	1	D	
LR(1)	Ratio Setting low limit	-	1	D	
HS	Setpoint high limit	Eng	1	A	Limit and
LS	Setpoint low limit	Eng	1	A	
HA	High Absolute Alarm limit	Eng	1	A	Alarm
LA	Low Absolute Alarm limit	Eng	1	A	
HD	High Deviation Alarm limit	Eng	2	A	settings
LD	Low Deviation Alarm limit	Eng	2	A	
HO	3-Term Output high limit	%	3	-	
LO	3-Term Output low limit	%	3	-	
EL	Error limit	%	3	-	
IF	Input channel filter const.	sec	3	-	3-Term
XP	Proportional band constant	%	4	-	Algorithm
TI	Integral time constant	min/s	3	-	related
TD	Derivative time constant	min/s	3	-	parameters
SL	Local Setpoint	Eng	1	A	Setpoint
RS(1)	Ratio Setting	-	1	D	related
RB(1)	Ratio Bias	Eng	1	A	parameters
MP(2)	Measured (remote) Power	Eng	1	C	
OP	3-Term Output level	%	3	-	Monitor -
SP	Resultant internal Setpoint	Eng	1	A	
PV	Process Variable	Eng	1	A	only
ER	Error value	Eng	1	A	
TS	Algorithm sampling period	min/s	3	-	parameters
SW	Switch bank S1/S2 settings	-	5	-	
DS	Digital Input/Output states	-	5	-	Status
MD	Controller Operating Mode	-	5	-	words

TABLE 4.1 List of 6360 parameter functions and their respective mnemonics

4.2 Terminal Initialisation and Parameter Entry Procedures

When the 8260 Hand-held terminal is first plugged into the front-panel of the Controller, the CPU detects its presence via one of the pins of the 7-way connector. As soon as this occurs, the RS422 supervisory serial data link on the rear connector is disabled and after a delay of about 2 seconds, the terminal is initialised. The following message is transmitted to the display:-

?	?			C	M	D

This message is a prompt to the operator requesting that a 2 character Command Parameter is entered in the position of the two question marks. A list of all possible user commands is given in Table 4.1 together with their corresponding 2 character mnemonics that are actually entered via the terminal keyboard. It should be noted that certain command parameters, i.e.: those concerned with Ratio operation, will only appear in the parameter list when switch no. 1 of switch bank S2 is ON (see Note 1). Similarly the Measured Power parameter, MP, only appears in the table when MD bit 4 is high (See Note 2). Table 4.1 also indicates the units applicable to each command function and the format in which the parameter data is entered from 1 to 16. Table 4.2 defines these 16 data formats in terms of the number of digits entered, the range, sign of entry and the decimal point position. It can be seen from Table 4.2 that format 1 and 2 commands have their decimal point position defined by a status word. In the case of the 6360 this is the "DP" status word which is described more fully in Section 4.3.1. Table 4.1 shows which particular digit of the "DP" status word is used to define the decimal point position for each individual format 1 and 2 command parameter.

A full description of Parameter entry procedures using the 8260 Hand-held terminal is given in Section 3 of the System 6000 Communications Handbook. It is recommended that this document is consulted before the user attempts to programme the 6360 Controller via the Hand-held terminal. It is also recommended that a record of each parameter is made on a 6360 Set-up Sheet like the example shown in Appendix D. This will assist in record keeping and programming spare or replacement instruments.

NOTES

The following points should be noted with regards to Table 4.1.

(1) These parameters only appear in the list in the RATIO mode, i.e. S2 no. 1 is ON.

(2) The MP parameter only appears in the list when MD bit 4 is high.

FORMAT	RANGE	POLARITY	DECIMAL POINT POSITION
1	0000 to +/-9999	Bipolar (+/-)	Defined by status word
2	0000 to +9999	Positive (+)	Defined by status word
3	00.00 to +99.99	Positive (+)	Fixed
4	000.0 to +999.9	Positive (+)	Fixed
5	0000 to FFFF	4 Hexadecimal digits	
6	00 to 99	2 Decimal digits	
7	0 to 9	1 Decimal digit	
8	AAAA to ZZZZ	4 ASCII characters (upper case)	
9	0.000 to +9.999	Positive (+)	Fixed
10	0000 to 9999	Positive (+)	Fixed
11	.0000 to +.9999	Positive (+)	Fixed
12	.0000 to +/-.9999	Bipolar (+/-)	Fixed
13	0.000 to +/-9.999	Bipolar (+/-)	Fixed
14	00.00 to +/-99.99	Bipolar (+/-)	Fixed
15	000.0 to +/-999.9	Bipolar (+/-)	Fixed
16	0000 to +/-9999	Bipolar (+/-)	Fixed

TABLE 4.2 List of Command Parameter Data Formats

4.3 Status word parameters

Table 4.1 shows that there are 6 status word parameters associated with the 6360 Process Controller. These are always format 5 parameters and Table 4.2 shows that they consist of 4 hexadecimal characters in the range 0000 to FFFF with a positive sign character for parameter entry. When any of these parameters are entered via the 8260 Hand-held terminal the Controller replies with the current value of the parameter preceded by a "greater than" sign to indicate that the data is in hexadecimal notation, e.g:-

I	I	>	3	6	0	2

Detailed descriptions of each of the 6 status word parameters are given in the following Sections.

4.3.1 II - Instrument Identity

This parameter returns the instrument identity and issue number, i.e. 3602 for the 6360 issue 2. II is a read-only parameter and its exact format is given below:-

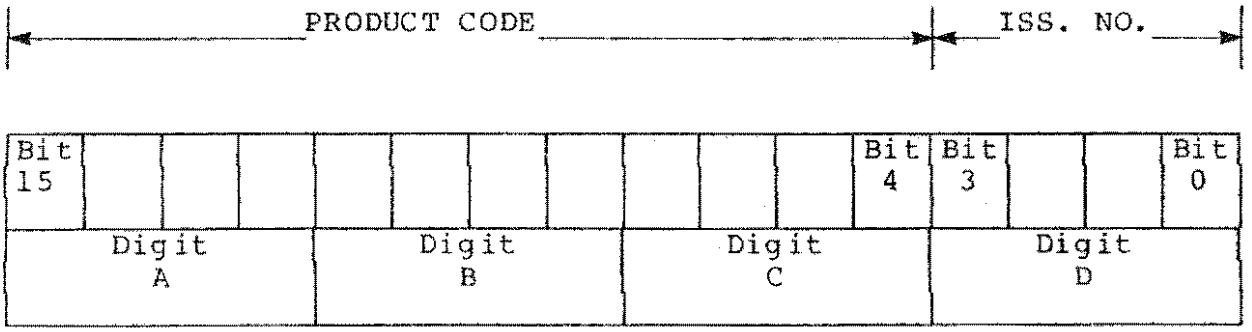

DIGIT	BIT	FUNCTION
A,B,C	15-4	Product Code (6) 360
D	3-0	Issue Number 2

4.3.2 DP - Decimal Point Position

The DP status word is used to programme the decimal point position of the Front-panel digital readout and 8260 Hand-held terminal display for each of the 3 analogue input channels of Section 2.4.2. The format of the DP parameter is given below:-

Bit 15															Bit 0
Digit A				Digit B				Digit C				Digit D			

DIGIT	FUNCTION	
A	Channel 1 Decimal Point selection and related parameters (0-4)	- Process Variable
B	Channel 2 Decimal Point selection in RATIO mode only (0-4)	- Ratio Process Variable
C	Channel 3 Decimal Point selection (0-4)	- Measured Power signal
D	Calculated Ratio Setting (RS) Decimal Point selection (0-4)	- Read-only

The exact function of the individual digits within the DP parameter are described in the following sections:-

a) Channel 1 Decimal Point (Digit A)

The first or most-significant digit of the DP parameter is used to select the decimal point position for the Process Variable (Channel 1) analogue input as it is displayed on the Front-panel digital readout. The number entered must lie within the range 0 to 4 and will position the decimal point according to the table shown below:-

DIGIT 1 (M.S)	DISPLAY FORMAT
0	9 9 9 9
1	9 9 9.9
2	9 9.9 9
3	9.9 9 9
4	.9 9 9 9

Once the Channel 1 decimal point position has been programmed with the DP command the resulting display format will appear on the Hand-held terminal for every Command function that is related to the Process Variable range of the Controller. This means in fact that most of the Format 1 and 2 commands listed in Table 4.1 will be displayed with the same decimal point position as for the Process Variable, viz:-

1H, 1L, HS, LS, HA, LA, HD, LD, SL, SP, PV and ER

For this reason it is recommended that when a Controller is powered-up and programmed for the first time as is described in Section 4.2.1 the DP command should be the first to be entered.

b) Channel 2 Decimal Point (Digit B)

The second digit of the DP parameter is used to select the decimal point position for the Channel 2 analogue input. Section 2.4.2 b) shows that the Channel 2 input is allocated to the Remote Setpoint signal or the Ratio Process Variable signal depending upon the position of S2 no. 1. When Channel 2 is the Remote Setpoint input then it will be found to have the same decimal point position as the Process Variable. When Channel 2 is the Ratio Process Variable input then its decimal point position is programmed via the second digit of the DP parameter. In this case the decimal point position will follow the same display format as given in Section 4.3.2 a) for the Process Variable. These conditions are summarised in Table 4.3.

When S2 no. 1 is ON, then the Ratio Process Variable ranging parameters 2H and 2L will appear in the parameter list of Table 4.1 and these will be displayed with the decimal point position as selected by digit B of the DP parameter. The use of the decimal point position of the Ratio Process Variable is discussed in Section 5.2 of the System 6000 Controller Applications Handbook.

The third digit of the DP parameter is used to select the decimal point position for the Channel 3 analogue input. Section 2.4.2 c) shows that the Channel 3 input may be allocated to the Track signal, the Trim signal, the decimal point position is affected by the settings of switch no. 1 of switch bank S2 and MD bit 4 as summarised in Table 4.4.

RATIO MODE ENABLE SWITCH SETTING S2 NO. 1	CHANNEL 2 FUNCTION	CHANNEL 2 DECIMAL POINT POSITION
OFF	Remote Setpoint	Same as Process Variable (Channel 1)
ON	Ratio Process Variable	Selectable via DP command, digit B

TABLE 4.3 Channel 2 Decimal Point positions

RATIO MODE ENABLE SWITCH S2 NO. 1	MEASURED POWER DISPLAY SELECT MD bit 4	CHANNEL 3 FUNCTION	CHANNEL 3 DECIMAL POINT POSITION
OFF	LOW	Setpoint, SL, trim	Same as Process Variable (Channel 1)
ON	LOW	Ratio setting RS trim	Same as Ratio Setting, RS
OFF	HIGH	Measured Power MP	Selectable via DP command, digit C
ON	HIGH	Measured Power MP	Selectable via DP command, digit C

TABLE 4.4 Channel 3 Decimal Point positions

The four possible combinations are considered as follows:-

(i) S2 no. 1 - OFF, MD bit 4 LOW

In this case the Channel 3 input serves as the Setpoint Trim and so the trim ranging parameters 3H and 3L of Table 4.1 will be displayed with the same decimal point position as the Process Variable. Thus digit C of the DP parameter will be forced to the same value as digit A.

(ii) S2 no. 1 - ON, MD bit 4 LOW

In this case the Channel 3 input serves as the Ratio Setting Trim and the decimal point position is calculated by an algorithm which is discussed in Section 5.2 of the System 6000 Controller Applications Handbook. The third digit of the DP parameter will be forced to this calculated value which is displayed in the digit D position as described in Section 4.5.4. Consequently the Ratio related parameters 3H, 3L, HR, LR and RS will be displayed with the decimal point position as indicated by the table in Section 4.3.1 a).

(iii) S2 no. 1 - OFF or ON, MD bit 4 HIGH

Whenever MD bit 4 is high regardless of the setting of S2 no. 1 then the Channel 3 input is used for the Measured Power signal. In this case the third digit of the DP parameter may be set to give the required decimal point position of the Measured Power as displayed on the Controller Front panel. Similarly the value of the Measured Power signal, MP, and the associated ranging parameters 3H and 3L will be displayed on the Hand-held terminal with the same decimal point position.

d) Ratio Setting Decimal Point (Digit D)

In the Ratio mode the 6360 Controller computes the optimum range and decimal point position for the Ratio Setting RS from the decimal point positions of the Primary and Secondary Process variables. These positions are in fact entered into the digit A and B positions of the DP parameter in Patio Mode. Consequently digit D displays the calculated decimal point position for RS at all times even when the Ratio Control mode is not selected. In the Ratio mode, however, provided a Measured Power display has not been selected, digit C is forced to follow the digit D value. (Refer also to Section 5.2 of the System 6000 Controller Applications Handbook)

HEX. CHAR	PROCESSING ROUTINE FUNCTION	RANGE
0	No Processing	0 to 10V
1	Square Root Function:- Vout = $\sqrt{Vin \times 10V}$	0 to 10V
2	Thermocouple type J (Iron-Constantan)	0 to 800 °C
3	Thermocouple type K (Chromel-Alumel)	0 to 1280 °C
4	Thermocouple type T (Copper-Constantan)	-240 to 400 °C
5	Thermocouple type S (Pt10%RH-Pt)	0 to 1750 °C
6	Thermocouple type R (Pt13%RH-Pt)	0 to 1750 °C
7	Thermocouple type E (Chromel-Constantan)	0 to 1000 °C
8	Thermocouple type B (Pt30%Rh-Pt6%Rh)	0 to 1800 °C
9	Platinum Resistance Thermometer (Pt100%)	-200 to 1000 °C
A	Reserved for User Specified Linearisation	As Required
B	Reserved for User Specified Linearisation	As Required
C	Reserved for User Specified Linearisation	As Required
D	Reserved for User Specified Linearisation	As Required
E	Reserved for User Specified Linearisation	As Required
F	Inversion Function:- Vout = 10V - Vin	0 to 10V

TABLE 4.5 List of the Available Input Signal Processing Functions (Selected by IC Parameter Digit A, B, and C)

4.3.3 IC - Input Channel Processing

It has been mentioned that each of the 3 analogue input channels can be linked to a digital processing routine before its resultant value is used by the 3-Term control algorithm. The Status word Command Parameter, IC, is used to select which of the 16 possible processing routines are linked to each of the 3 input channels. The last digit of IC is also used for masking out the Front-panel push-button switches. The format of the IC parameter is given below:-

INPUT CHANNEL PROCESSING												PUSH-BUTTON MASKING			
Bit 15			Bit 12	Bit 11			Bit 8	Bit 7			Bit 4	Bit 3			Bit 0
Digit A				Digit B				Digit C				Digit D			

DIGIT	BIT	FUNCTION
A	12-15	Channel 1 input processing function (0-F) - Process Variable
B	8 -11	Channel 2 input processing function (0-F) - Remote Setpoint/Ratio Process Variable
C	4 -7	Channel 3 input processing function (0-F) - Setpoint Trim/Ratio Trim/Measured Power (bypassed in TRACK mode)
D	3	Common push-button mask bit
	0,1,2	Push-button mask level 0-7

The exact function of the individual digits within the IC parameter are described in the following sections.

a) Channel 1, 2, 3 input processing functions (digits A,B,C)

Each of these digits can lie in the full hexadecimal range of 0 to F and Table 4.5 lists the 16 possible processing routines with their corresponding hexadecimal numbers. If no processing is required for any input channel then it can be seen from Table 4.3 that a zero is entered in the corresponding position for the IC parameter. It should be noted that the channel 3 input processing function (digit C) is bypassed whenever the TRACK mode is asserted (see Section 3.2). The use of the input channel processing functions is discussed in the following sections.

(i) Function 1 - Square Root Function

The formula of Table 4.5 shows that the output of the Square Root function is a value that may be considered as corresponding with a voltage. This effective output voltage, Vout, is a 0-10V value and is formed by taking the square root of the input voltage Vin multiplied by 10 where Vin is also in the range 0-10V, e.g:-

Vin	Vout (effective)
0V	0V
0.4V	2.0V
1.6V	4.0V
10.0V	10.0V (theoretical)

(ii) Functions 2 to 8 - Thermocouple Linearisation

Table 4.5 shows that functions 2 to 8 are used for linearisation of the 7 most common thermocouple types, i.e. types J, K, T, S, R, E and B respectively.

Table 4.5 also shows the maximum temperature range over which the linearisation will function for each type and the programmed setpoint span of the 6360 Controller must always lie within this range.

For example, the type J thermocouple linearisation from Table 4.5 can be used over the range 0 to 800°C which means that for the Process Variable input channel:-

1L = 000.0 (Process Variable low range)
1H = 800.0 (Process Variable high range)

If, for example, a Process Variable range of 0 to 400.0°C were required, then 1L = 000.0 and 1H = 400.0, but in addition the thermocouple amplifier or input converter must be scaled to provide a 0 to 10V output for a 0 to 400.0°C input.

Thus, in general, when the thermocouple linearisation functions of Table 4.5 are used:-

6360 PROCESS VARIABLE SPAN 1L to 1H

= INPUT CONVERTER SPAN 0 TO 10V

The Controller automatically decides which portion of the linearisation table is to be used for the selected Process Variable span by referring to the Decimal Point Position (DP), Process Variable High Range (1H) and Process Variable Low Range (1L) parameters of Sections 4.3.2 and 4.4.1 respectively. When using the thermocouple linearisation functions the 1H and 1L ranging parameters should always be integers. If they are inadvertently entered as non-integers the 6360 will automatically round them to the nearest integer value internally for linearisation purposes. However, for display purposes the PV will remain scaled to the non-integer values of 1H and 1L.

Again, for example, if a Process Variable range of 0 to 1000 °C is required with a type S thermocouple then the following parameters would be entered to give Process Variable readings with a 1°C resolution:-

DP > 0000

IC > 5000

1H = 1000

1L = 0000

The associated Input Converter must be ranged to provide a 0 to 10V output for a 0 to 1000°C input.

It should also be noted that greater display resolution can be obtained by appropriate selection of the Decimal Point Position and Process Variable Range. For example, the type J thermocouple linearisation could be used to obtain Process Variable readings with a 0.01°C resolution over a 100°C span by entering the following parameters:-

DP > 2000

IC > 2000

1H = 99.99

1L = 00.00

It is not possible, however, to exceed 0.01°C resolution on any of the thermocouple ranges specified in Table 4.5.

CHANNEL	RATIO MODE ENABLE SWITCH S2 NO. 1	MEASURED POWER DISPLAY SELECT MD bit 4	CHANNEL FUNCTION	LINEARISATION SPAN
1	don't care	don't care	Process Variable	1L - 1H
2	OFF	don't care	Remote Setpoint	1L - 1H
	ON	don't care	Ratio PV	2L - 2H
3	OFF	LOW	Setpoint Trim	3L - 3H
	ON	LOW	Ratio Trim	3L - 3H
	don't care	HIGH	Measured Power	3L - 3H

TABLE 4.6 Effect of switch S2 no. 1 and MD bit 4 on linearisation spans

When processing routines are linked to the Channel 2 or 3 inputs then the span used for the linearisation depends upon the settings of switch no. 1 of switch bank S2 and MD bit 4. Table 4.6 summarises the effects of these switches on the linearisation span selected for each channel.

It can be seen from Table 4.6 that the Process Variable input always uses 1L to 1H as the linearisation span. When channel 2 is allocated to the Remote Setpoint it also uses 1L and 1H but when it is the Ratio Process Variable it has its own range 2L to 2H as the span. Channel 3 always uses 3L to 3H as its linearisation span but the decimal point position will change according to the table shown in Section 4.3.2.

(iii) Function 9 - Platinum Resistance Thermometer

The Platinum Resistance Thermometer linearisation function of Table 4.5 requires the same operating characteristics as for the thermocouples, viz:- the 6360 Controller Process Variable span must lie within the range -200.0 to 1000°C and the associated input converter must be ranged appropriately.

(iv) Function A to E - User Specified Linearisations

These 5 processing routines are reserved for any special linearisation functions required by the user that are not catered for by functions 1 to 9. Each linearisation function must be specified by the user in the form of a 24 element break-point table over the required range of values. The TCS factory will then be able to quote a price and delivery for including these functions in a 6360 Controller.

(v) Function F - Inversion Functions

The formula of Table 4.5 shows that the output of the inversion function is a value that may be considered as corresponding with a voltage. This effective output voltage, Vout, is a 0-10V value formed by direct inversion of the Vin signal which is also in the range 0-10V, e.g:-

Vin	Vout (effective)
0V	10V
5V	5V
10V	0V

The Vout value will then be used by the 6360 as the resultant signal obtained from the selected analogue input channel. If the inversion function were applied to the Channel 1 analogue input, for example, this would invert the Process Variable (PV) signal. The inversion effectively occurs before any other processing is carried out so that the Process Variable as displayed on the digital readout would be the inverted value in this case.

As an example, to demonstrate the effect of the Inversion function, assume that the 6360 has been programmed with the following parameters :-

DP > 1000

IC > F000

1H = 500.0

1L = 000.0

The Process Variable will now be displayed on the front-panel digital readout, or read back via the serial data links as follows:-

CHANNEL 1 INPUT	PROCESS VARIABLE DISPLAY
0.0V	500.0
2.5V	375.0
5.0V	250.0
7.5V	125.0
10.0V	000.0

Applications for this facility may include the following:-

A) The liquid level in a tank is monitored sometimes by a transducer which registers the gap between the liquid surface and the top of the tank. If the output of such a transducer is the Process Variable input of a control loop then the Channel 1 input may be inverted so that the 6360 will display the actual liquid level in the tank and not the air gap.

B) When Setpoints have Trims applied (see Section 3.11) very often the sense of the Trim signal voltage is opposite to that required. For example it may be necessary to reduce the temperature of the final zone of a Plastics Extruder as the Extruder speed increases to compensate for frictional heating within the Extruder barrel. This can be achieved directly with a 6360 by inverting the tachometer voltage signal applied to the Channel 3 analogue input which is used for the Local Setpoint Trim.

C) A Control Valve may require a 10V output from a 6360 Controller to fully close it and a 0V output to be fully opened. In this case the Valve Position feedback signal can be connected up to the Channel 3 Measured Power input which should then be inverted by means of IC function F (see Section 3.10). The Measured Power display will then indicate the amount by which the valve is actually open at any instant and not the amount closed.

IC parameter - digit D				Front-panel push-buttons		
bit 2	bit 1	bit 0	mask level value	Remote/ Ratio (R)	Auto (A)	Manual (M)
0	0	0	0	Enabled	Enabled	Enabled
0	0	1	1	Enabled	Enabled	Disabled
0	1	0	2	Enabled	Disabled	Enabled
0	1	1	3	Enabled	Disabled	Disabled
1	0	0	4	Disabled	Enabled	Enabled
1	0	1	5	Disabled	Enabled	Disabled
1	1	0	6	Disabled	Disabled	Enabled
1	1	1	7	Disabled	Disabled	Disabled

TABLE 4.7 Front-Panel Push-Button Masking Levels

Computer Enable input (pin 28)	IC parameter - Digit D		Push-button Masking effect
	Bit 3	Bits 0,1,2 (Mask level value)	
0V	X	0	Unmasked
0V	X	1 - 7	Masked to level 1 - 7
X	0	0	Unmasked
X	0	1 - 7	Masked to level 1 - 7
15V	1	X	All buttons masked

TABLE 4.8 Truth Table of Push-Button Masking Actions

KEY : X = don't care

b) Push-button masking (digit D)

The least-significant digit of the IC parameter (digit D) is used in conjunction with the Computer Enable logic input (pin 28 - COMP.EN.IN(1)) to permit the masking or disabling of the front-panel push-buttons as follows:-

(i) Bits 0, 1, 2 - mask level

The 3 least-significant bits, 0, 1 and 2 of digit D are used to specify a mask level of 0 to 7 which affects the 3 front-panel control mode select push-buttons R, A and M as shown in Table 4.7. For example, a mask level of 0 enables all three buttons, while a mask value of 6 only permits the Manual (M) button to be operated.

(ii) Bit 3 - common disable

When bit 3 of digit D is set to logic 1 and the Computer Enable input is at 15V then all 3 of the control mode select push-buttons are disabled. If either bit 3 is set to logic 0, or the Computer Enable input is at 0V, then the masking takes up the level set by bits 0, 1 and 2. This feature therefore allows all buttons to be masked out remotely via a logic input or the RS422 serial data link, or they can be masked out locally with the 8260 Hand-held terminal. The truth table for this masking operation is given in Table 4.8.

4.3.4 SW - Internal Switch Status

The status word command parameter, SW, is a monitor-only parameter and is used to obtain a readout of the settings of the 16 internal switches of switch banks S1 and S2. This facility allows the internal switch status of a 6360 Controller to be determined via the Hand-held terminal or the RS422 supervisory link without removing the instrument from the rack or sleeve.

The format of the SW parameter is shown below:-

SWITCH BANK 2								SWITCH BANK 1							
Bit 15							Bit 8	Bit 7							Bit 0
Digit A				Digit B				Digit C				Digit D			

DIGIT	BIT	SWITCH		FUNCTION
	15	1	S2	Ratio mode enable
A	14	2		Output Display Inversion select
	13	3		Inverse Ratio mode select
	12	4		Inverse 3-Term output select
	11	5		Power fail return mode select
B	10	6		Setpoint action when not in AUTO mode
	9	7		Channel 3 output function select
	8	8		3-Term time constant range select
	7	1	S1	Integral term balance disable on SL changes
C	6	2		Baud rate selection switches for RS422 data link (see Table 2.2)
	5	3		
	4	4		
	3	5		Protocol mode select
D	2	6		4
	1	7		2 Group Identifier (GID)
	0	8		1

Each bit of the SW parameter is set to a logic 1 when the corresponding switch is in the ON position, a logic 0 will be read back for a switch in the OFF position.

The exact functions of the digits within the SW parameter are discussed in the following sections:-

a) Switch bank S2 (digits A, B)

The two most-significant digits of SW read back the status of internal switch bank S2. The individual switch functions within S2 are discussed in Section 2.3.2 b) and are listed in Table 2.1.

b) Switch banks S1 (digits C, D)

The two least-significant digits of SW read back the status of internal switch bank S1. The individual switch functions within S1 are discussed in Section 2.3.2 a) and are listed in Table 2.1.

For example, the Controller may respond to the SW command as follows:-

S	W	>	5	2	7	9

This means that switch nos. 1, 4 and 7 of switch bank S2 are ON, and switch nos. 2, 3, 4, 5 and 8 of switch bank S1 are ON. All other switches are OFF.

It should be noted that the settings of switch bank S3 cannot be accessed via the 8260 Hand-held terminal or serial data link via the SW parameter

4.3.5 DS - Digital Input/Output status

The status word command parameter DS is used to give access to the current states of the 8 digital inputs and 8 digital outputs of the 6360 Controller via the 8260 Hand-held terminal or Supervisory data link.

The format of the DS parameter is shown below:-

DIGITAL INPUTS								DIGITAL OUTPUTS							
Bit 15							Bit 8	Bit 7							Bit 0
Digit A				Digit B				Digit C				Digit D			

DIGIT	BIT	FUNCTION			READ/WRITE STATUS
	15	$\overline{\text{HOLD}}$ enable		Digital inputs	Read-only
A	14	TRACK enable			Read-only
	13	REMOTE SPT/RATIO enable			Read-only
	12	COMPUTER enable			Read-only
	11	ADD.8	Unit Identifier (UID)		Read-only
B	10	ADD.4			Read-only
	9	ADD.2			Read-only
	8	ADD.1			Read-only
	7	USER LOGIC BIT 2		Digital outputs	Read/Write
C	6	USER LOGIC BIT 1			Read/Write
	5	$\overline{\text{(HOLD+MANUAL)}}$status			Read/only
	4	$\overline{\text{REMOTE AUTO/RATIO}}$ status			Read-only
	3	BATTERY VOLTAGE $\overline{\text{LOW}}$			Read-only
D	2	$\overline{\text{HARDWARE}}$ ALARM			Read-only
	1	$\overline{\text{LOW}}$ ALARM			Read-only
	0	$\overline{\text{HIGH}}$ ALARM			Read-only

Each bit of the DS parameter is set to a logic 1 when the corresponding digital input or output line is at 15V, a logic 0 will be read back for a 0V signal.

The exact functions of the digits within the DS parameter are discussed in the following sections:-

a) Digital inputs (digits A, B)

The 8 most-significant bits of DS, bits 8-15 are read-back via digits A and B and correspond to the 8 digital inputs of the 6360 Controller. These inputs appear on pins 24 to 31 inclusive and their functions are given in Section 2.4.4. It can be seen from the DS format table that all 8 digital input bits are read-only.

b) Digital outputs (digits C, D)

The 8 least-significant bits of DS, bits 0-7 are read-back via digits C and D and correspond to the 8 digital outputs of the 6360 Controller. These outputs appear on pins 16 to 23 inclusive and their functions are given in Section 2.4.5. It can be seen from the DS format table that bits 0 to 5 inclusive are read-only.

(i) User logic bits (bits 6,7)

Bits 6 and 7 of the digital outputs are the User Logic bits 1 and 2 respectively which can be set high or low via the 8260 Hand-held terminal or the supervisory data link in the manner described in Section 2.4.5 g) and h).

Although most of the bits of the DS parameter are read-only, data can be entered in all 4 digit positions without causing an illegal operation condition. However, only data corresponding to bits 6 and 7 will be accepted by the 6360 Controller; the others will be ignored.

For example, the Controller may respond to the DS command as follows:-

D	S	>	9	1	2	7

This means that both User Logic bits are OFF. They may both be set ON by entering FFFF via the Hand-held terminal which will reply with:-

D	S	>	9	1	E	7

This means that both User Logic bits are ON, though the same result could have been obtained by entering 00C0 instead of FFFF.

4.3.6 MD - Controller Operating Mode and Front-Panel status

The status word parameter MD is used to give access to the current Operating Mode of the 6360 Controller and the state of the Front-panel controls via the 8260 Hand-held terminal or Supervisory data link.

The format of the MD parameter is shown below:-

CONTROLLER OPERATING MODE								FRONT-PANEL STATUS							
Bit 15							Bit 8	Bit 7							0
Digit A				Digit B				Digit C				Digit D			

DIGIT	BIT	FUNCTION		READ/WRITE STATUS
	15	HOLD mode	OPERATING MODE	Read-only
A	14	TRACK mode		Read-only
	13	MANUAL mode		Read/write
	12	AUTO mode		Read/write
	11	REMOTE/RATIO mode		Read/write
B	10	REMOTE SPT/RATIO enable I/P		Read-only
	9	PV OPEN-CIRCUIT		Read-only
	8	MEMORY SUMCHECK FAIL		Read-write
	7	LOWER button (▲)	FRONT-PANEL STATUS	Read-only
C	6	RAISE button (▼)		Read-only
	5	LED test bit		Write-only
	4	Measured Power Display select		Read/write
	3	SETPOINT button (SP)		Read-only
D	2	REMOTE/RATIO button (R)		Read-only
	1	AUTO button (A)		Read-only
	0	MANUAL button (M)		Read-only

The exact functions of the digits within the MD parameter are discussed in the following sections:-

a) Controller Operating Mode

The first two digits of the MD command parameter, A and B, corresponding to bits 8 to 15 inclusive indicate the current Operating Mode of the 6360 Controller. The functions of each of these 8 bits are described below:-

(i) Bit 15 - HOLD

The most-significant bit of digit A is set to a logic "1" whenever the Controller is in the HOLD mode as described in Section 3.1. This bit, corresponding to an MD value of 8000, is read-only.

(ii) Bit 14 - TRACK

The second bit of digit A is set to a logic "1" whenever the Controller is in the TRACK mode as described in Section 3.2. This bit, corresponding to an MD value of 4000, is read-only.

(iii) Bit 13 - MANUAL

The third bit of digit A is set to a logic "1" whenever the Controller is operating in the MANUAL mode as described in Section 3.4, or the FORCED MANUAL mode of Section 3.3. This bit is a read/write bit so that the Controller may be set to the MANUAL operating mode by entering a value of 2000 for the MD command parameter.

(iv) Bit 12 - AUTO

The least-significant bit of digit A is set to a logic "1" whenever the Controller is operating in the AUTO mode of Section 3.5. This bit is a read/write bit so that the Controller may be set to the AUTO operating mode by entering a value of 1000 for the MD command parameter.

(v) Bit 11 - REMOTE/RATIO

The most-significant bit of digit B is set to a logic "1" whenever the Controller is operating in the REMOTE AUTO mode of Section 3.6, or the RATIO mode of Section 3.7. This bit is a read/write bit so that the Controller may be set to the REMOTE AUTO or RATIO operating modes by entering a value of 800 for the MD command parameter.

(vi) Bit 10 - REMOTE SETPOINT/RATIO MODE ENABLE Input

The second bit of digit B is set to a logic "1" whenever the REMOTE SETPOINT/RATIO MODE ENABLE input, pin 29, of the Controller is at 15V. This is in fact identical to bit 13 of the DS status word parameter of Section 4.3.5 a) and unless it is at logic "1" it will not be possible to set the Controller into the REMOTE AUTO or RATIO modes. This means that in practice a supervisory computer would first read back the MD parameter and if the 400 bit is set it could then set the 800 bit to select REMOTE AUTO or RATIO. If the 400 bit was not set then the computer would not attempt to set bit 11 as described in 4.3.6 a) (v).

(vii) Bit 9 - PROCESS VARIABLE OPEN-CIRCUIT

The third bit of digit B is set to a logic "1" state whenever the Channel 1 analogue input becomes open-circuit as described in Section 2.6.3. Under these conditions the 6360 Controller is forced into the FORCED MANUAL operating mode and cannot enter a lower priority mode such as AUTO until Channel 1 has a valid input. This again means that in practice a supervisory computer would first read back the MD status word and examine the state of the 200 bit (bit 9). If this was set to a logic "1" it would mean that the Process Variable input was open-circuit and consequently the Controller could not be taken out of the FORCED MANUAL operating mode.

(viii) Bit 8 - MEMORY SUMCHECK FAILURE

The least-significant bit of digit B is set to a logic "1" state whenever the CPU detects a sumcheck failure in the non-volatile memory area as described in Section 2.6.2. When this occurs the Controller will be forced into the FORCED MANUAL operating mode and this fault condition can only be cleared by resetting bit 8 to a logic zero. This can be done by means of the 8260 Hand-held terminal or the supervisory data link writing a zero to bit 8 which is made Read/Write for this purpose. If the supervisory computer ever read back bit 8 as a logic "1" it would mean that a sumcheck failure had occurred and that the Controller could not be taken out of the FORCED MANUAL operating mode until bit 8 was reset to logic zero.

If either bit 8 or bit 9 are set to logic "1" this will cause the HARDWARE ALARM logic output (pin 18) to fall to 0V as described in Section 2.4.5 c), while bit 2 of the DS status word would also be set to logic zero.

b) Front-Panel Status

The last two digits of the MD command parameter, C and D, corresponding to bits 0 to 7 inclusive indicate the current state of the Front-panel push-buttons etc., with the exception of bit 4, which is used for Measured Power select. The functions of each of these 8 bits are described below:-

(i) Bits 6 and 7 - Raise/Lower Buttons

The two most-significant bits of digit C are normally at logic "0" and are set to a logic "1" respectively whenever the Raise (▲) or Lower (▼) buttons are being pressed.

(ii) Bit 5 - LED Test bit

A visual check of the front-panel LEDs can be made using the LED test bit, bit 5 of digit C. This bit may be set from the 8260 Hand-held terminal, or the RS422 serial link and when set to logic 1 all the front-panel LEDs are turned on for 1.5 seconds. It should be noted that this bit will always appear as a logic 0 when monitored by the 8260 Hand-held terminal or the RS422 supervisory data link.

(iii) Bit 4 - Measured Power display select bit

When this bit is set high, the Measured Power display facility is selected. This is fully described in Section 3.10.

(iv) Bits 0 to 3 - Manual, Auto, Remote and Setpoint Buttons

These 4 bits of digit D are normally at logic "0" and are set to logic "1" whenever the manual (M), Auto (A), Remote/Ratio (R) or Setpoint display (SP) buttons are pressed as shown in the Format Table.

c) Use of the MD Command Parameter

The MD Command Parameter is similar to the DS parameter of Section 4.3.5 in that data can be entered in all 4 digit positions without causing an illegal operation condition. The data corresponding to the read-only bits of the Format Table will be ignored and only data in bit positions 4, 5, 8, 11, 12 and 13 will be accepted by the 6360 Controller. Furthermore, one and only one of the 3 bits 11, 12 and 13 must be set when writing new data to the MD parameter or an illegal operation will result. Thus the Controller will accept MD parameter values of :-

0800, 1000 or 2000

but will reject MD parameter values of :-

0000, 1800, 2800, 3000 or 3800

For example the Controller may respond to the MD command as follows:-

M	D	>	1	0	1	0

This means that the Controller is in AUTO, no Front-Panel buttons are pressed and the Measured Power display facility if selected. The user may select the MANUAL operating mode by entering 2010 via the hand-held terminal which will reply with :-

M	D	>	2	0	1	0

In this case the same result could have been obtained by entering 6010, A010 or E010, but F010 would be rejected and the Controller would stay in AUTO.

4.4 Input channel ranging parameters

Table 4.1 shows that there are 6 ranging parameters associated with the 3 analogue input channels of the 6360 Process Controller. These are all format 1 parameters and Table 4.2 shows that they are bipolar entries in the range -9999 to +9999 with the decimal point position defined by the DP status word.

Descriptions of each of the 6 input channel ranging parameters are given in the following sections:-

4.4.1 1H, 1L - Channel 1 input ranging

These parameters define, in Engineering Units, the span of the Process Variable input PV (Channel 1). The value entered in 1H is equivalent to an input of 10V on pin 13 or 5V on pin 10 when S3 no. 1 is ON. Similarly 1L is equivalent to an input of 0V on pin 13 or 1V on pin 10 when S3 no. 1 is ON. The range of values is -9999 to +9999 and 1H must be greater than 1L. The decimal point position for both of these parameters is programmed by digit A of the DP parameter as described in Section 4.2.2 a).

4.2.2 2H, 2L - Channel 2 input ranging

These parameters define, in Engineering Units, the span of the Ratio Process Variable input (channel 2) and only appear in the Parameter List in RATIO mode i.e. when S2 no. 1 is ON. The value entered in 2H is equivalent to an input of 10V on pin 14 or 5V on pin 11 when S3 no. 2 is ON. Similarly 2L is equivalent to an input of 0V on pin 14 or 1V on pin 11 when S3 no. 2 is ON. The range of values is -9999 to +9999 and 2H must be greater than 2L.

In the RATIO mode the decimal point position for both of these parameters is programmed by digit B of the DP parameter as described in Section 4.3.2 b). It should be noted that when Channel 2 is being used for a Remote Setpoint input (S2 no. 1 OFF) then it will have the same span and decimal point position as for the PV which are defined by 1H and 1L.

4.4.3 3H, 3L - Channel 3 input ranging

The Channel 3 analogue input can be used for one of 4 different functions depending upon the operating mode of the 6360 Controller. Section 2.4.2 c) shows that these functions are:-

a) TRACK input

When the TRACK ENABLE logic input, pin 30, is at 15V the 6360 Controller is operating in the TRACK mode (see Section 3.2) and all Channel 3 input ranging, filtering and signal processing is overidden.

b) Local Setpoint Trim

When S2 no. 1 is off and MD bit 4 is low the Channel 3 signal is used as a Local Setpoint Trim input. Under these conditions 3H becomes the Setpoint Trim High range and is the value added to the Local Setpoint, SL, when an input of 10V is applied to pin 15, or 5V on pin 12 when S3 no. 3 is ON. Similarly 3L is the Setpoint Trim Low range and is the value added to SL for a 0V input on pin 15, or 1V on pin 12 when S3 no. 3 is ON. The range of values is the same as the PV span of 1L to 1H and 3H must be greater than 3L. In this mode the decimal point position will be the same as for 1L and 1H as described in Section 4.3.2 c) (i). For a more detailed description of the Setpoint Trim facility, refer to Section 3.11.1. Note the span of 3H to 3L must be no more than twice the span of 1H to 1L.

c) Ratio Setting Trim

When S2 no. 1 is ON and MD bit 4 is low the 6360 Controller is operating in the RATIO mode of Section 3.7 and the Channel 3 signal is used as a Ratio Setting Trim input. Under these conditions 3H becomes the Ratio Setting Trim High range and is the value added to the Ratio Setting, RS, when an input of 10V is applied to pin 15, or 5V on pin 12 when S3 no. 3 is ON. Similarly 3L is the Ratio Setting Trim Low range and is the value added to RS for a 0V input on pin 15, or 1V on pin 12 when S3 no. 3 is ON. The range of values is the same as the RS span of LR to HR and 3H must be greater than 3L. In this mode the decimal point position will be the same as for LR and HR as described in Section 4.3.2 c) (ii). For a more detailed description of the Ratio Setting Trim facility, refer to Section 3.11.2.

d) Measured Power

When MD bit 4 is high, regardless of the setting of S2 no. 1, the Channel 3 signal is used as the Measured Power (MP) input. Under these conditions the value entered as 3H is equivalent to an MP input of 10V on pin 15, or 5V on pin 12 when S3. no 3 is ON. Similarly, 3L is equivalent to an MP input of 0V on pin 15, or 1V on pin 12 when S3 no. 3 is ON. The range of values is -9999 to +9999 and 3H must be greater than 3L. In this mode the decimal point position for both 3H and 3L is programmed by digit C of the DP parameter as described in Section 4.3.2 c). For a more detailed description of the Measured Power display facility, refer to Section 3.10.

4.5 Limit and Alarm Settings

Table 4.1 shows that there are 10 parameters associated with the Limit and Alarm Settings of the 6360 Process Controller. Descriptions of each of these parameters are given in the following sections:-

4.5.1 HR, LR - Ratio Setting Limits

It can be seen from Table 4.1 that the Ratio Setting limit parameters only appear in the list when the 6360 is operating in the RATIO mode, i.e. S2 no.1 is ON. Under these conditions these 2 command parameters are used to limit the range over which the Ratio Setting, RS, can be varied. Fig 3.3 shows that RS can be varied by the Raise/Lower buttons or either of the serial links when S2 no. 1 is ON and the controller is in RATIO. If it is in AUTO or MANUAL then RS can only be varied by means of the serial links. Fig 3.3 also shows that HR and LR are used to limit the value of RS after the Ratio Setting Trim has been added when this facility is being used. The maximum value that RS can ever achieve will be limited to that programmed into HR, while the minimum value will be LR. If HR is set equal to LR then this locks RS to this value and prevents it from being altered by any means. The range of values for HR and LR is the same as for RS, i.e -9999 to +9999 and HR must be greater than LR. The decimal point position is programmed by digit D of the DP parameter as described in Section 4.3.2 d).

4.5.2 HS, LS - Setpoint Limits

These parameters define in Engineering Units the range over which the Resultant Setpoint, SP is allowed to vary. The flow diagram of Fig 3.3 shows that HS and LS affect SP according to the 6360 operating mode thus:-

a) 6360 in MANUAL or AUTO

Regardless of the setting of S2 no. 1 in MANUAL with S2 no. 6 OFF, or in AUTO, HS and LS limit the range over which the Local Setpoint, SL, can be varied by the Raise/Lower buttons or either of the serial links. In MANUAL with S2 no. 6 ON, SL tracks the PV input but is still limited by HS and LS. If S2 no. 1 is OFF then a Local Setpoint Trim can be added to SL and the resultant value is again limited by HS and LS before it becomes the Resultant Setpoint SP.

b) 6360 in REMOTE

With S2 no. 1 OFF and the Controller in REMOTE, Fig 3.3 shows that the Remote Setpoint from channel 2 is limited by HS and LS before becoming the SL value. The channel 3 input can be used as a Remote Setpoint Trim under these conditions and after it has been added to SL the resultant value is again limited by HS and LS before it becomes the Resultant Setpoint SP.

c) 6360 in RATIO

With S2 no. 1 ON and the Controller in RATIO, Fig 3.3 shows that the Ratio Setpoint is limited by HS and LS before becoming the SL value. SL cannot be trimmed under these conditions so SL is limited a second time before it becomes the Resultant Setpoint SP.

The range of HS and LS are the same as the Process Variable, i.e. 1L to 1H, and HS must be greater than LS. If HS is set equal to LS then this locks SL and hence SP to this value and prevents it from being altered by any means. Table 4.1 shows that the decimal point position for HS and LS is the same as for the PV, i.e. it is programmed by digit A of the DP parameter as described in Section 4.3.2 a).

4.5.3 HA, LA - Absolute Alarm Limits

The Absolute Alarm Limit parameters HA and LA are used to set the levels, in Engineering Units, at which the PV will generate High or Low Absolute alarms respectively. The 6360 will enter the High Alarm condition if the PV exceeds the value set in HA. Under these conditions the Process Variable bargraph on the front-panel will flash and the High Alarm logic output, pin 16 , will fall to 0V as described in Section 2.4.5 a). The 6360 will enter the Low Alarm condition if the PV is less than the value set in LA. Under these conditions the Process Variable bargraph will flash and the Low Alarm logic output, pin 17, will fall to 0V as described in Section 2.4.5 b).

The range of HA and LA are the same as the Process Variable, i.e 1L to 1H and HA must be greater than LA. If Deviation alarms are required, then the Absolute alarms may be disabled by setting HA to the 1H value, and LA to the 1L value. Table 4.1 shows that the decimal point position for HA and LA is the same as for the PV, i.e it is programmed by digit A of the DP parameter as described in Section 4.3.2 a).

4.5.4 HD, LD - Deviation Alarm Limits

The Deviation Alarm limit parameters HD and LD are used to set the levels, in Engineering units, at which the Deviation (ER = PV - SP) will generate High or Low Deviation alarms respectively. The 6360 will enter the High Alarm condition if the Positive Deviation (PV - SP) exceeds the value set in HD. Under these conditions the Process Variable bargraph will flash and the High Alarm logic output, pin 16 will fall to 0V as described in Section 2.4.5 a). The 6360 will enter the Low Alarm condition if the Negative Deviation (SP - PV) exceeds the value set in LD. Under these conditions the Process Variable bargraph will flash and the Low Alarm logic output, pin 17, will fall to 0V as described in Section 2.4.5 b).

It should be noted that HD and LD are always entered as positive numbers and their range is the modulus of the PV span 1L to 1H. There is no restriction on the relative magnitudes of HD and LD, i.e. LD can be greater than HD for example. If Absolute alarms are required, then the Deviation alarms may be disabled by setting both HD and LD to the modulus of 1L or 1H whichever is the larger. Table 4.1 shows that the decimal point position for HD and LD is the same as for the PV, i.e. it is programmed by digit A of the DP parameter as described in Section 4.3.2 a).

4.5.5 HO, LO - 3 Term Output Limits

The HO and LO limit parameters restrict the range over which the 3-Term Output parameter, OP can vary. They operate on OP whether it is being varied by the Raise/Lower buttons or serial links in MANUAL mode, or when OP is being calculated by the 3-Term Algorithm in AUTO, REMOTE AUTO, or RATIO modes. OP is also limited to the range LO to HO when the 6360 is operating in the TRACK mode. Table 4.1 shows that HO and LO are set in percent over the full scale operating range of 0 to 99.99% and HO should always be set greater than LO.

4.6 3-Term Algorithm related parameters

Table 4.1 shows that there are 5 parameters associated with the 3-Term Algorithm used in the 6360 Process Controller. Descriptions of each of these parameters are given in the following sections.

4.6.1 EL - Error Limit

The Error Limit parameter is used to limit the value of the Error term (ER) before it is applied to the 3-Term control algorithm as described in Section 3.12. This is a means of regulating the amount of time that the 3-Term control output, (OP) is held in saturation after the region of linear operation has been reached. Since a faster plant response is obtained the longer the output is held in saturation under these conditions, it follows that the Error Limit parameter (EL) can be used to control the amount of overshoot exhibited by a particular system.

EL is a format 3 parameter and is hence always positive with a range of 0 to 99.99%. When this facility for overshoot inhibition is not required, EL should be set to its maximum value of 99.99%. As EL is reduced the system response will speed up, but too small a value may cause overshoot. The TCS approach to overshoot control using Error Limit is discussed more fully in Section 3 of the System 6000 Controller Applications Handbook.

4.6.2 IF - Input channel filter constant

The IF parameter specifies the time constant of a digitally implemented first order filter that is applied to all 3 analogue input channels of the Controller. IF is a format 3 parameter and is hence always positive with a range of 0 to 99.99 seconds. It should be noted that the filtering specified by IF is applied to all 3 channels at all times with the exception of the channel 3 input when the Controller is operating in the TRACK mode of Section 3.2.

4.6.3 XP - Proportional band constant

The XP parameter defines the overall gain of the Controller as described in Section 3.12. The exact relationship between XP and the gain is given by the expression:-

$$GAIN = \frac{100}{XP}$$

e.g. A proportional band value of 100 = Unity gain
A proportional band value of 5 = Gain of 20

XP is a format 4 parameter and is hence always positive with a range of 0.1 to 999.9% corresponding to a gain range of 1000 to 0.1 respectively.

If set to zero, the controller acts as an ON/OFF controller as described in Section 3.13.

4.6.4 TI, TD - Integral and Derivative time constants

The TI and TD time constant parameters define the value of the Integral and Derivative time constants used in the 6360 3-Term algorithm described in Section 3.12. They are both format 3 parameters and their range depends upon the setting of switch no. 8 of switch bank S2 (See Section 2.3.2 a) (viii)). The effect this switch has is as follows:-

a) S2 no. 8 OFF - seconds mode.

In the seconds mode both TI and TD can be set over the range 0.04 to 99.99 seconds, while a value of 00.00 will set either of the terms off completely.

b) S2 no. 8 ON - minutes mode.

In the minutes mode both TI and TD can be set over the range 0.01 to 99.99 minutes, while a value of 0.00 will set either of the terms off completely.

When the controller is operating in ON/OFF control, TI defines the ON/OFF deadband as a percentage of the range 1L to 1H. A full description of ON/OFF control is given in Section 3.13. TD is not used in ON/OFF control.

4.7 Setpoint related parameters

Table 4.1 shows that there are 3 parameters associated with the Setpoint of the 6360 Controller and these are described in the following sections:-

4.7.1 SL - Local Setpoint

This parameter defines, in Engineering Units, the internal Setpoint before Trim is applied. Fig 3.3 shows that SL can be derived from a number of sources depending upon the operating mode of the 6360, thus:-

a) MANUAL (S2 no. 6 - OFF)

Here the SL value may be altered via the Raise/Lower buttons or serial data links.

b) MANUAL (S2 no. 6 - ON)

Here SL tracks the Process Variable and cannot be altered but only monitored via the front-panel or serial data links.

c) AUTO

Here SL can be altered as in a) above.

d) REMOTE (S2 no. 1 - OFF)

Here the 6360 is in REMOTE SETPOINT mode and SL tracks the value on the channel 2 analogue input. Thus SL cannot be altered but only monitored via the front-panel or serial data links.

e) RATIO (S2 no. 1 - ON)

In the RATIO mode SL tracks the Ratio Setpoint and can only be monitored via the serial links.

In all these cases SL is constrained within the range defined by the HS and LS Setpoint Limit parameters as described in Section 4.5.2. Table 4.1 shows that the decimal point position for SL is the same as for the PV, i.e. it is programmed by digit A of the DP parameter as described in Section 4.3.2 a).

4.7.2 RS - Ratio Setting

The RS parameter is the actual value of the Ratio Setting used by the Controller in calculating the Ratio Setpoint as described in Section 3.7.3 d). Table 4.1 shows that RS only appears in the list in the RATIO mode, i.e. S2 no. 1 is ON. Fig 3.3 shows that RS is always constrained within the range defined by the HR and LR Ratio Setting Limit parameters as described in Section 4.5.1. Furthermore RS can be altered by the Raise/Lower buttons or either of the serial links in RATIO, but only via the serial links in AUTO or MANUAL. Table 4.1 shows that the decimal point position is programmed by digit D of the DP parameter as described in Section 4.3.2 d).

4.7.3 RB - Ratio Bias

The RB parameter defines the value of bias in Engineering Units that is added to the Ratio Setpoint as described in Section 3.7.3 d). Table 4.1 shows that RB only appears in the list in the RATIO mode, i.e. when S2 no. 1 is ON. Fig 3.3 shows that RB has the same range as the PV i.e. 1L to 1H, while Table 4.1 shows that the decimal point position is programmed by digit A of the DP parameter as described in Section 4.3.2 a).

4.8 Monitor-only parameters

Table 4.1 shows that there are 6 monitor-only parameters associated with the 6360 Process Controller, and these are described in the following sections.

4.8.1 MP - Measured Power

It can be seen from Table 4.1 that the Measured Power parameter only appears in the list when MD bit 4 is high. Under these conditions, MP represents the value of Measured Power in Engineering Units as applied to the Channel 3 analogue input (pin 15). Fig 3.3 shows that MP is scaled to lie within the range defined by 3H and 3L as described in Section 4.4.3 d). The decimal point position for MP is programmed by digit C of the DP parameter as described in Section 4.3.2 c). For more information concerning the Measured Power display facility refer to Section 3.10.

4.8.2 OP - 3-Term Output Level

Table 4.1 shows that the OP parameter is the current output value of the 3-Term control algorithm expressed as a percentage of the full scale operating range of 0 to 99.99%. OP is always constrained to lie within the limits defined by HO and LO as described in Section 4.5.5. It should be noted that OP is a read-only parameter in all operating modes except for MANUAL or FORCED MANUAL. In these two modes OP can be altered via either of the serial data links.

With the ON/OFF control mode selected via XP, the Control Output level, OP, can only take up either the ON state or the OFF state as described in Section 3.13.1 c).

4.8.3 SP - Resultant Internal Setpoint

This parameter defines, in Engineering Units, the resultant internal Setpoint after Trim has been applied as described in Section 3.11. Fig 3.3 shows that this is effectively the Local Setpoint value, SL, after Trim has been added and the Setpoint limits HS and LS have been applied. Table 3.7.3 gives the truth table for Setpoint and Trim derivations, and the effects on the SP parameter may be summarised as follows.

a) Local Setpoint Trim (S2 no. 1 - OFF, MD bit 4 - LOW)

In MANUAL or AUTO modes SP is simply the value of SL plus the trim signal as described in Section 3.11.1.

b) Remote Setpoint Trim (S2 no. 1 - OFF, MD bit 4 - LOW)

In REMOTE mode SL tracks the Remote Setpoint input so that SP is the same as in a) above.

c) Ratio Setting trim (S2 no. 1 - ON, MD bit 4 - LOW)

In RATIO mode SL cannot be trimmed as the channel 3 input is used for trimming the Ratio Setting value, RS, as described in Section 3.11.2. Therefore in RATIO mode SP equals SL.

d) Measured Power mode (MD bit 4 - HIGH)

In Measured Power mode SL cannot be trimmed as the channel 3 input is the Measured Power signal, hence SP equals SL.

e) Track mode (Pin 30 = 15V)

In TRACK mode SL cannot be trimmed as the channel 3 input is the Track signal, hence SP equals SL.
(Note that TRACK overrides Measured Power).

Table 4.1 shows that the decimal point position for SP is the same as for the PV, i.e. it is programmed by digit A of the DP parameter as described in Section 4.3.2 a).

4.8.4 PV - Process Variable

This parameter defines, in Engineering Units, the value of the Process Variable input signal after it has been filtered and had any signal processing applied. Fig 3.3 shows that the PV input is scaled by the Channel 1 input ranging parameters 1L and 1H as described in Section 4.4.1. Input channel processing for PV is defined by digit A of the IC parameter as described in Section 4.3.3 a). Table 4.1 shows that the decimal point position is programmed by digit A of the DP parameter as described in Section 4.3.2 a). 1

4.8.5 ER - Error Value

The Error Value parameter ER is obtained by subtracting the Resultant Setpoint, SP, from the Process Variable PV as illustrated in Fig 3.3. The ER value is then applied to the 3-Term algorithm calculation as described in Section 3.12. ER is thus in Engineering Units and spans the same range as PV, i.e. 1L to 1H. Table 4.1 shows that the decimal point position is programmed by digit A of the DP parameter as described in Section 4.3.2 a).

4.8.6 TS - Algorithm Sampling Period

The 3-Term algorithm takes the ER value of Section 4.8.5 and computes a new OP value (see Section 4.8.2) every TS seconds. Thus TS is called the algorithm sampling or scheduling period and is closely related to the Integral and Derivative time settings, TI and TD of Section 4.6.4. The exact relationships also depends upon whether the 6360 is operating in the seconds or minutes mode as defined by S2 no. 8 of Section 2.3.2 b), thus:-

a) Seconds mode (S2 no. 8 - OFF)

In the seconds mode the value of TS is held constant at 0.04s (36ms) until the Integral (TI) or Derivative (TD) times exceed 18.4 seconds. At this point TS is computed to be TI or TD/512 seconds, i.e. at the maximum value of TI or TD of 99.99 seconds, TS is increased to 0.2 seconds.

b) Minutes mode (S2 no. 8 - ON)

In the minutes mode the value of TS is held constant at 0.01 minutes until TI or TD exceed 5.12 minutes. At this point TS is computed to be TI or TD/512 minutes, i.e. at the maximum value of TI or TD of 99.99 minutes, TS is increased to 0.2 minutes.

It should be noted that the value of TS does not affect the rate at which the 3 analogue input channels are sampled by the A to D circuitry on the Analogue input/output board of Section 1.4.5. This sampling rate is fixed at 36ms as described in Section 1.5.3 f) and is completely independent of TS, TI, TD or S2 no. 8.

Section 5 Computer Supervision of 6360 Process Controllers

In common with all System 6000 instruments the 6360 Process Controller is fitted with 2 ports for serial data communications. The first of these is the RS232 port available on the front-panel which is used for connection of the 8260 Hand-held terminal as described in Section 4.1. This port allows local operators to communicate on a one-to-one basis when entering the Command Parameters which are used to characterise the 6360 for a particular control loop.

The second communications port is an RS422 serial interface available on the module rear connector pins 35 to 38 inclusive. The RS422 ports of a number of 6360 Controllers may be bussed onto a supervisory data link connected to a remote Supervisory Computer or other intelligent device. This bus structure then allows the Supervisory Computer to monitor or update the Command Parameters of a whole network of 6360 Controllers and other System 6000 instruments. As the means of implementing the Supervisory link are common to all System 6000 instruments, these are described in other TCS documents as follows:-

5.1 Serial Data Bus Hardware Installation

A full definition of the RS422 transmission standards are given in Section 7 of the System 6000 Installation Guide together with a discussion of:-

a) Interface connections.

b) Cable impedance and termination.

c) Interface signal polarity.

5.2 Serial Data Transmission

Section 2.3.2 a) briefly mentions the role of Switch bank S1 in setting up the RS422 baud rate and Group Identifier (GID). While Section 2.4.4 a) covers the use of the digital inputs to generate the necessary Unit Identifier (UID). A more complete description is given in Section 4 of the System 6000 Communications Handbook together with a discussion of:-

a) RS422 characteristics and technical specification.

b) Serial data transmission.

c) Binary Synchronous Communications Data Link Control.

d) Instrument Group and Unit addressing.

	0	1	2	3	4	5	6	7
0	II	DP	(*) 1H	(*) 1L	(*) HD	(*) LD	(*) MN	(*) SP
8	(*) PV	(*) OP	(*) HA	(*) LA	HS	LS	HO	LO
16	HR	LR	SL	EL	XP	TI	TD	2H
24	2L	3H	3L	MP	RS	RB	IC	SW
32	DS	IF	TS	ER	MD			

TABLE 5.1 List of 6360 Parameter Numbers and their respective mnemonics

NOTE

(*) Only those parameters marked (*) are available with Enquiry Polling.

5.3 Communication Protocols

All data transfers between the 6360 and a Supervisory Computer via the RS422 data link are carried out using a communications protocol. TCS has chosen an ANSI standard protocol called BISYNC (Binary Synchronous) for System 6000 instruments and this is known by the abbreviation X3.28. The 6360 Controller can operate this protocol in either the ASCII or Binary mode depending upon the setting of S1 no. 5 (see Section 2.3.2 a) (iii)). A full definition of these two protocol modes may be found as follows:-

a) ASCII protocol

This is discussed in Section 5 of the System 6000 Communications Handbook, while the list of ASCII Command Mnemonics is given in Table 4.1 of this manual.

b) Binary Protocol

This is discussed in Section 6 of the System 6000 Communications Handbook, while the associated list of Parameter Numbers is given in Table 5.1 of this manual.

5.4 MN - Mode Number Parameter

The MN parameter is used to give the Supervisory Computer access to the operating mode of the 6360, and also to provide other related status information. The MN parameter does not appear in the parameter list when using an 8360 Hand-held terminal, nor can it be accessed using the ASCII mode of the protocol via the RS422 data link. It can only be accessed as parameter number 6 (PNO = 6) via the Binary mode of the serial link protocol.

The Mode Number, MN, is a format 5 read/write parameter consisting of 4 hexadecimal digits in the range 0000 to FFFF with positive sign character for parameter entry. The format of the MN parameter is given overleaf:-

												OPERATING MODE			
												8	4	2	1
Bit 15			Bit 12	Bit 11			Bit 8	Bit 7			Bit 4	Bit 3		1	Bit 0
Digit A				Digit B				Digit C				Digit D			

DIGIT	BIT	FUNCTION
	15	N/A
	14	Parameter change of state bit
A	13	N/A
	12	N/A
	11	N/A
	10	N/A
B	9	Power failure warning bit
	8	N/A
C	4-7	N/A
D	0-3	6360 Operating Mode

The exact functions of the digits within the MN parameter are discussed in the following sections:-

a) Parameter Change of State Bit (digit A, bit 14)

The only bit used within digit A is bit 14 which is set to a logic "1" whenever the Hand-held terminal or Front-panel push-buttons have been used to change the value of a Command Parameter, or the 6360 operating mode.

This bit, corresponding to an MN value of 4000 cannot be read via the Hand-held terminal, but must be reset via the RS422 serial link using the Binary mode of the protocol.

b) Power Failure Warning Bit (digit B, bit 9)

The only bit used within digit B is bit 9 which is set at a logic "1" by any hardware Reset or Power Failure detected within the 6360. This bit can only be rest via the RS422 serial link using the Binary mode of the protocol.

c) Digit C

This digit is unallocated and reads back as zero.

d) Control Loop Operating Mode (digit D)

The function of this digit is to give the supervisory computer a direct indication of which of the 7 operating modes are currently active. The significance of each of these mode numbers is as follows:-

MN digit D	6360 Operating Mode
0	HOLD
1	TRACK
2	MANUAL
3	AUTO (Local Setpoint)
4	RATIO
5	REMOTE AUTO (Cascade)
6	FORCED MANUAL
7	AUTO FALL-BACK (from REMOTE or RATIO)

Each of the 6360 operating modes indicated by digit D of the MN parameter can be controlled via the serial data link as follows:-

(i) Modes 0 and 1 cannot be selected and are read-only.

(ii) Modes 2 and 3 can be selected.

(iii) Mode 4 can be selected only in RATIO, i.e. S2 no. 1 is ON, and the RATIO ENABLE input, pin 29, is at 15V.

(iv) Mode 5 can only be selected when S2 no. 1 is OFF and the REMOTE SETPOINT ENABLE input, pin 29, is at 15V.

(v) Mode 6 cannot be selected and is read-only.

(vi) Mode 7 is selected automatically by the 6360 if modes 4 or 5 are entered and pin 29 is at 0V.

Pin No.	Designation	Function	
1			
2	0VR	0V Reference	POWER SUPPLIES
3	0VP	0V Power	
4			
5			
6			
7			
8	DC SUPP.IN	DC Supply (20-30V) input	
9	W.DOG.OUT(1)	Watchdog Timer output	
10	PV.IN(1-5V)	Process Variable	4-20mA/1-5V ANALOGUE INPUTS
11	REM.SP.IN(1-5V)	Remote Setpoint/Ratio PV	
12	SP.TRM.IN(1-5V)	SP Trim/Track/Meas. Pow.	
13	PV.IN(0-10V)	Process Variable	0-10V ANALOGUE INPUTS
14	REM.SP.IN(0-10V)	Remote Setpoint/Ratio PV	
15	SP.TRM.IN(0-10V)	SP Trim/Track/Meas. Pow.	
16	HI.ALM.OUT(0)	High Alarm output	8 - WAY 0 - 15V DIGITAL OUTPUTS
17	LO.ALM.OUT(0)	Low Alarm output	
18	HW.ALM.OUT(0)	Hardware Alarm output	
19	BAT.LOW.OUT(0)	Battery Voltage Low	
20	REM.AUT.OUT(0)	REM.AUT/RATIO status	
21	HLD+MAN.OUT(0)	(HOLD + MANUAL) status	
22	BIT.1.OUT(1)	User Logic Bit 1	
23	BIT.2.OUT(1)	User Logic Bit 2	
24	ADD.1.IN(1)	$2^0 = 1$ Unit Address (UID) inputs	8 - WAY 0 - 15V DIGITAL INPUTS
25	ADD.2.IN(1)	$2^1 = 2$	
26	ADD.4.IN(1)	$2^2 = 4$	
27	ADD.8.IN(1)	$2^3 = 8$	
28	COMP.EN.IN(1)	Computer enable input	
29	REM.SP.EN.IN(1)	Rem SP/RATIO enable I/P	
30	TRACK.EN.IN(1)	TRACK enable input	
31	HOLD.EN.IN(0)	HOLD enable input	
32	3T.OUT	3-Term Control output	0-10V NON-ISOLATED OUTPUTS
33	PV.OUT	Process Variable output	
34	SP/DEV.OUT	Setpoint/Deviation O/P	
35	XMT.OUT(-)	Transmit outputs	RS422 SUPERVISORY SERIAL DATA BUS
36	XMT.OUT(+)		
37	RCV.IN(-)	Receive inputs	
38	RCV.IN(+)		
39			
40	TX.SUPP(-)	Transmitter Supply	
41	TX.SUPP(+)		
42			
43	3T.OUT.ISOL(-)	Isolated 4-20 mA 3-Term Control output	
44			
45	3T.OUT.ISOL(+)		
46			
47			
48			

	PROCESS CONTROLLER																	
	6360																	
PIN NO	FUNCT	FROM	TO	FUNCT	FROM	TO	FUNCT	FROM	TO	FUNCT	FROM	TO	FUNCT	FROM	TO	FUNCT	FROM	TO
1																		
2	OVR																	
3	OVP																	
4																		
5																		
6																		
7																		
8	DC.SUP IN																	
9	W DOG OUT 1																	
10	PV. IN 1 – 5V																	
11	REM.SP IN																	
12	SP TRIM IN																	
13	PV. IN 0 – 10V																	
14	REM.SP IN																	
15	SP TRIM IN																	
16	HI.ALM OUT 0																	
17	LO.ALM OUT 0																	
18	HWALM OUT 0																	
19	BAT LO OUT 0																	
20	REM OUT 0																	
21	HO+MIN OUT 0																	
22	BIT 1 OUT 1																	
23	BIT 2 OUT 1																	
24	ADD.1 IN 1																	
25	ADD.2 IN 1																	
26	ADD.4 IN 1																	
27	ADD.8 IN 1																	
28	COMLEN IN 1																	
29	REM.SP EN. IN 1																	
30	TRK.EN IN 1																	
31	HO.EN IN 0																	
32	3T.OUT																	
33	PV.OUT																	
34	SP/DEV. OUT																	
35	XMT OUT –																	
36	XMT OUT +																	
37	RCV IN –																	
38	RCV IN +																	
39																		
40	TX SUPP–																	
41	TX SUPP+																	
42																		
43	3T.OUT –																	
44																		
45	3T.OUT +																	
46																		
47																		
48																		

TCS

7600 BIN SYSTEM
REAR TERMINATION ASSEMBLY

B6360

loopidentifier

rack & module no

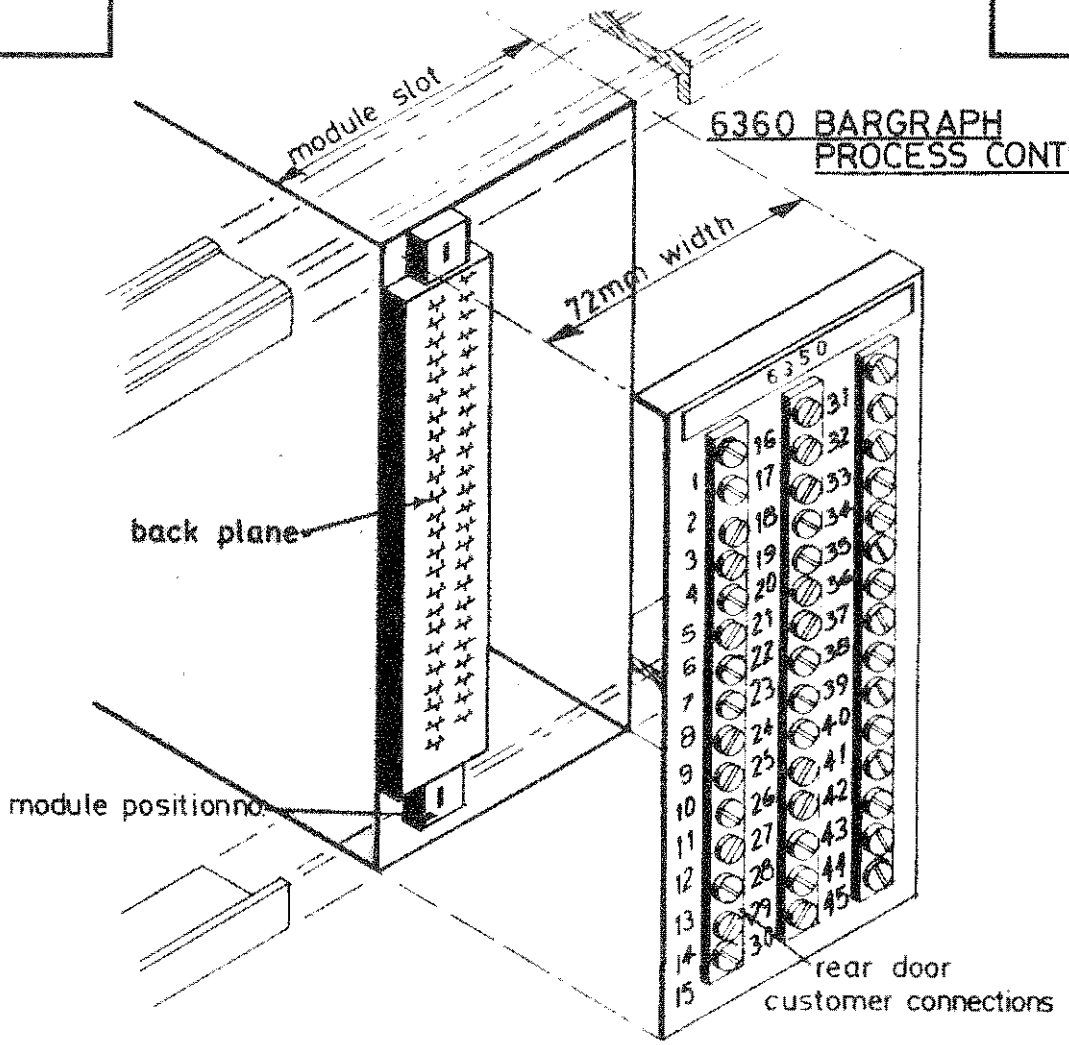

The B6360 termination assembly consists of a 48 pin back plane connector with wire looms linking the module connections on the back plane to three rows of 15 customer terminals.

The assembly is used to mount 6360 Bargraph Controllers into 7600 bin units and can only be ordered as part of a 7600 bin system.

Detailed technical and mechanical specifications can be found in the following related documents :-

7600 Sales Literature
6360 Module data sheet
6360 Module technical manual

Issue 1

Turnbull Control Systems Limited
Broadwater Trading Estate Worthing Sussex BN14 8NW
Telephone Worthing (0903)205277
Telex 87437

BIN INTERCONNECTIONS

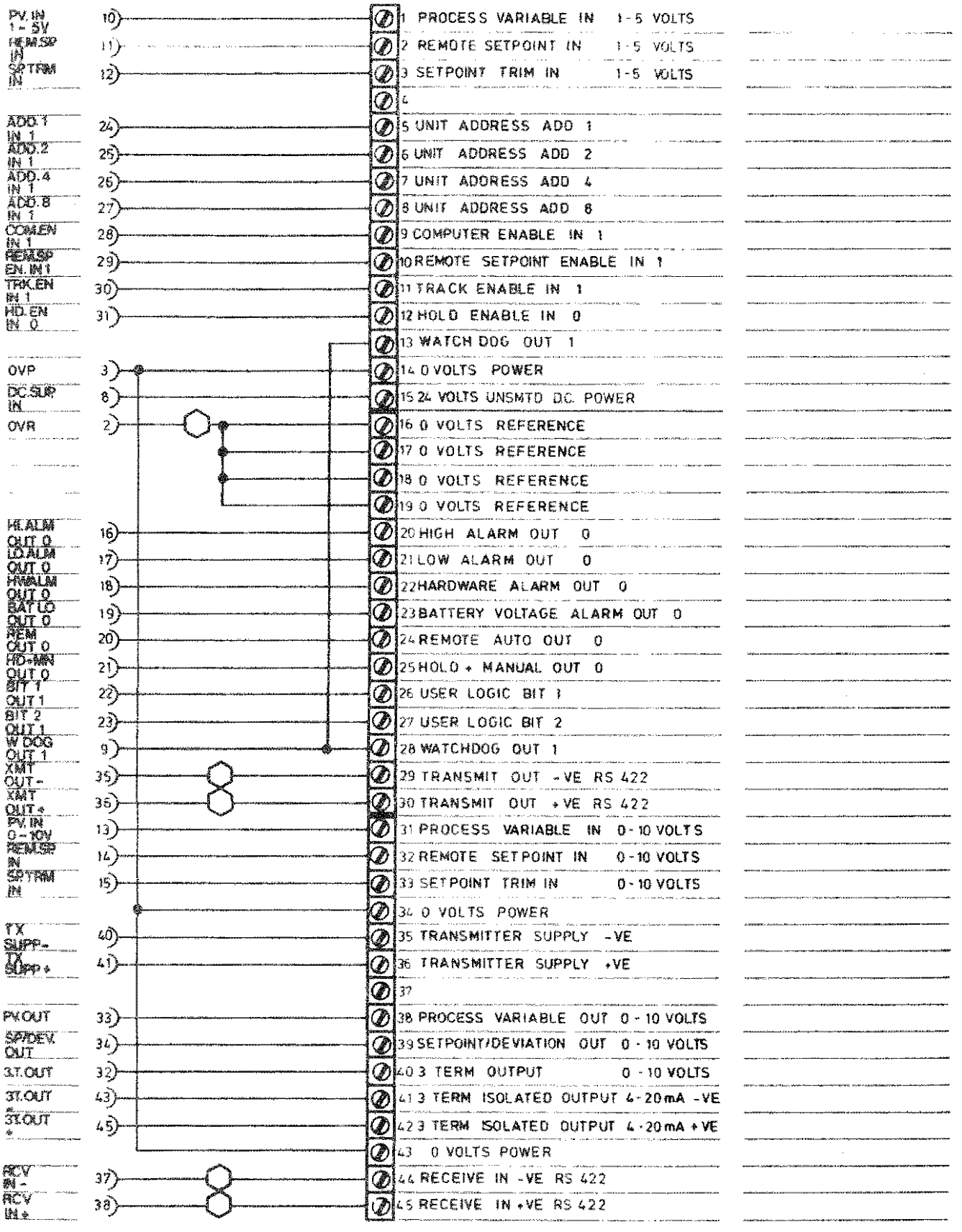

THESE LINES MAY BE BUSED TO OTHER MODULES IN THE BIN

SINGLE OR MULTI-WAY SLEEVE ASSEMBLY FOR MICROPROCESSOR BASED INSTRUMENTATION

NOTE
Drawing shows a single sleeve with cover and gland plate option for standard panel mounting (PM)

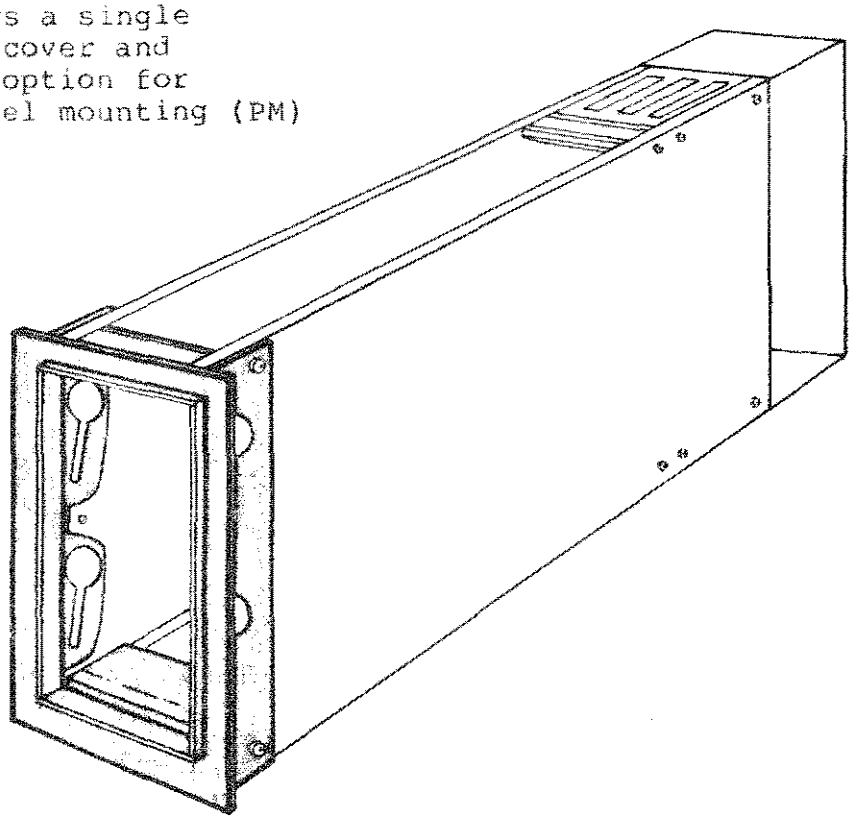

* Single, 3-way or 6-way panel mounting versions
* 6-way 19" rack mounting version
* all module connections available via screw terminals
* each module individually powered from 24V d.c. or mains

The 7900 assembly enables from 1 to 6 modules from the TCS System 6000 range of microprocessor based instruments to be panel or rack mounted in sleeves. Any combination of modules can be specified; 6350, 6351, 6352, 6353, 6358 and 6360 Controllers, 6432 and 6433 Signal Processors, 6434 Flow Totaliser and 6850 Programmer. Each instrument within the 7900 unit is individually powered via its own rear termination assembly, which also gives access to all the module connections.

Turnbull Control Systems Limited
Broadwater Trading Estate Worthing Sussex BN14 8NW
Telephone Worthing (0903)205277
Telex 87437

TECHNICAL SPECIFICATION

1) Installation Details for Panel Mounting Sleeves

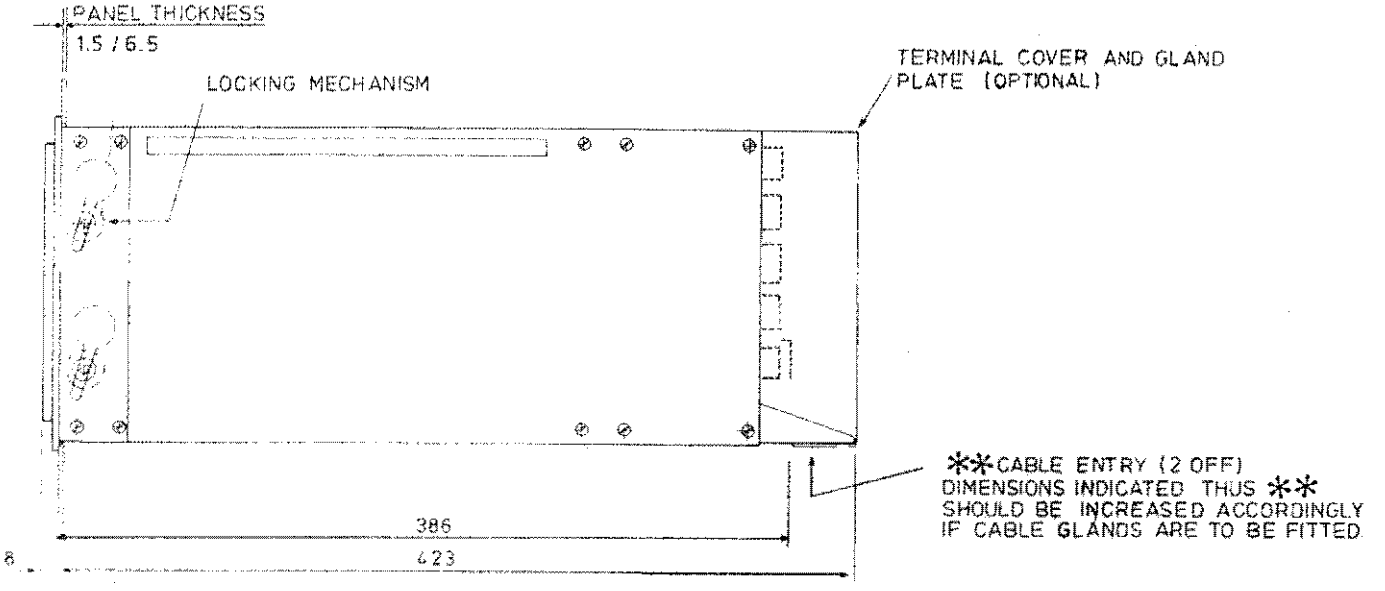

SIDE VIEW

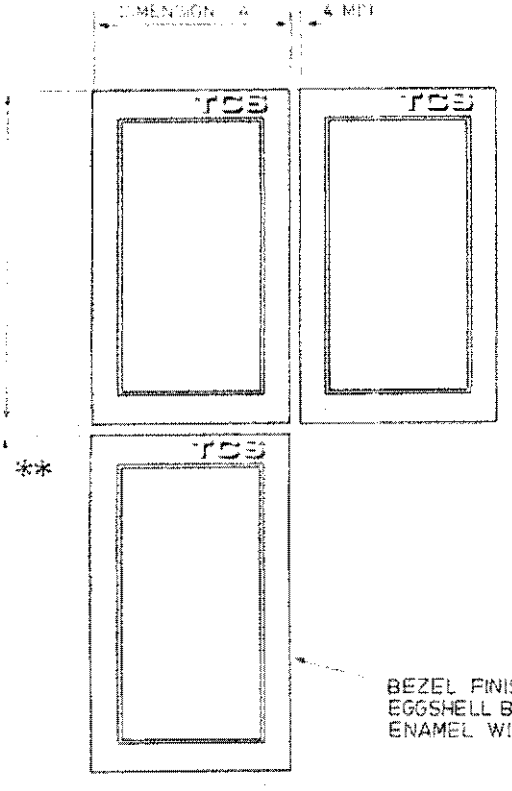

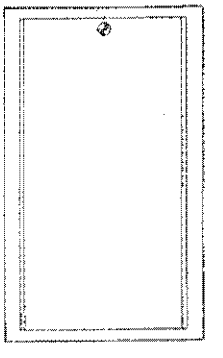

REAR VIEW

DIMENSION A	SLEEVE WIDTH
105	1-WAY
249	3-WAY
465	6-WAY

FRONT VIEW SHOWING OTHER POSSIBLE ADJACENT SLEEVES

2.1 Issue 2

2) Mounting Instructions

The dimensions of the various 7900 assemblies can be ascertained from the side and front view diagrams which also show the closest positioning of adjacent units. The diagram below gives the panel cut-out dimensions corresponding with the closest unit positioning.

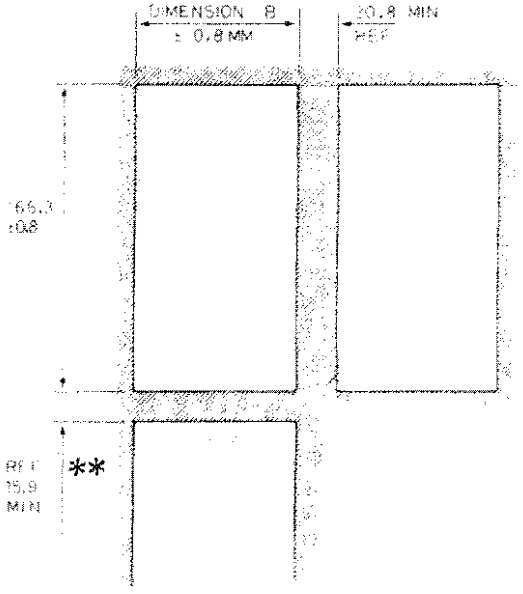

DIMENSION B	SLEEVE WIDTH
88.2	1-WAY
232.2	3-WAY
448.2	6-WAY

PANEL CUT-OUT DETAILS

To position a 7900 assembly in a panel and subsequently mount a microprocessor based instrument within it, the following installation procedure is carried out:-

(i) Press an empty 7900 sleeve assembly firmly into the panel cut-out.

(ii) On the 1-way sleeves, insert the 2 locking mechanisms into the lower keyhole slots on either side and push them down as far as possible. On 3 and 6 way sleeves, fit locking mechanisms in all four positions.

(iii) Tighten the socket screw inside each locking mechanism in a clockwise direction using the 2.5 A/F Hex Key provided.

(iv) For the TPM option fit the locating spigot on the DIN clip into the slot on the side plates, with the face pressed against the rear of the panel then tighten the screw until the assembly is secure.

(v) Slide the instrument, with its own 72mm module sleeve firmly into the recess using the catch-handle to lock it into position.

(vi) The optional rear-terminal cover may be removed to allow wiring access for power-supply and plant connections which may be brought in via the 2 cable entry glands provided. Rear supporting is recommended especially on mains powered versions.

2.2 Issue 2

TECHNICAL SPECIFICATION

a) Length : 423mm with CGP option
: 386mm without CGP option

b) Width
(i) 1-Way PM or TPM : 105mm
(ii) 3-Way PM or TPM : 249mm
(iii) 6-Way PM or TPM : 465mm
(iv) 6-Way 19" RM : 482.6mm (19")

c) Height (all versions) : 177.2mm (7")

d) Panel cut-out dimensions
(i) 1-Way : 88.2 x 166.3 + 0.8mm
(ii) 3-Way : 232.2 x 166.3 + 0.8mm
(iii) 6-Way : 448.2 x 166.3 + 0.8mm

e) Panel thickness
(i) PM version : 1.5 to 6.5mm
(ii) TPM version : 6.5 to 24mm

f) Permissible mounting angle : Panel may slope from vertical by -45 to +90 degrees

g) Customer cable size : 0.5 to 1.5mm

h) Bezel finish : Eggshell black stove enamel with silver trim

i) Weight

	DC VERSION	MAINS VERSION
(i) 1-Way PM or TPM :	3.6Kg	4.3Kg
(ii) 3-Way PM or TPM :	8.4Kg	10.5Kg
(iii) 6-Way PM or TPM or RM :	15.6Kg	19.8Kg

2.3 Issue 2

DESCRIPTION	ORDER CODE
Single or Multi-way Sleeve Assembly	7900
Sleeve Width	
a) Single Sleeve	1-WAY PM
or b) 3-Way Sleeve Panel Mounting	3-WAY PM
or c) 6-Way Sleeve Panel Mounting	6-WAY PM
or d) 6-Way Sleeve Rack Mounting	6-WAY 19" RM
or e) 1-Way Sleeve Thick Panel Mounting	1-WAY TPM
or f) 3-Way Sleeve Thick Panel Mounting	3-WAY TPM
or g) 6-Way Sleeve Thick Panel Mounting	6-WAY TPM
Supply Voltage	
a) 24V DC	24V
or b) 110V AC	110V
or c) 240V AC	240V
N.B. Multi-Way assemblies all have the same supply voltage	
Rear door cover and gland plate option for the rear termination assemblies	CGP
N.B. option only applies to panel mounting assemblies	

DESCRIPTION	ORDER CODE
Rear Termination Assemblies Specify which instrument is to fit into each sleeve position starting from the left-hand end (front view). Select from the following:-	
a) 6350 Process Controller	7350
or b) 6351 Incremental Controller	7351
or c) 6352 Bushing/Averaging Controller	7352
or d) 6353 Flow Controller	7353
or e) 6358 8-Loop Controller	7358
or f) 6360 Bar-Graph Process Controller	7360
or g) 6432 Signal Processor	7432
or h) 6433 Programmable Signal Processor	7433
or i) 6434 Flow Totaliser	7434
or j) 6850 Setpoint Programmer	7850
or k) Blank slot	BLANK
Current Inputs For the following modules the option of 1-5V or 4-20mA is provided. (All channels to be the same) a) 7350 b) 7351 c) 7352 d) 7353 e) 7360 f) 7850	
1-5V (Standard)	--
4-20mA (Option)	BR
N.B. Every slot must be specified in order:- /slot 6 /slot 5 /...../slot 2 /slot 1 / where slot 1 is in the most right-hand position viewed from the front. These options form the second line of the Ordering Code.	

ORDER CODE EXAMPLES

a) A 6350 Process Controller in a single sleeve (Formally; 7350) with 4-20mA current input on all three channels:-
7900/1-WAY PM/240V/CGP/7350/BR

b) A 3-way panel mounting assembly with two Controllers and a Programmer:-
7900/3-WAY PM/240V/CGP/7350/7350/BR/7850

c) A 6-way 19" rack mounting assembly:-
7900/6-WAY 19" RM/240V/7350/7350/7350/7350/BR/7432/7850/BR

d) A 1-way thick-panel mounting sleeve:-
7900/1-WAY TPM/24V/CGP/7432

BAR-GRAPH PROCESS CONTROLLER REAR TERMINATION ASSEMBLY

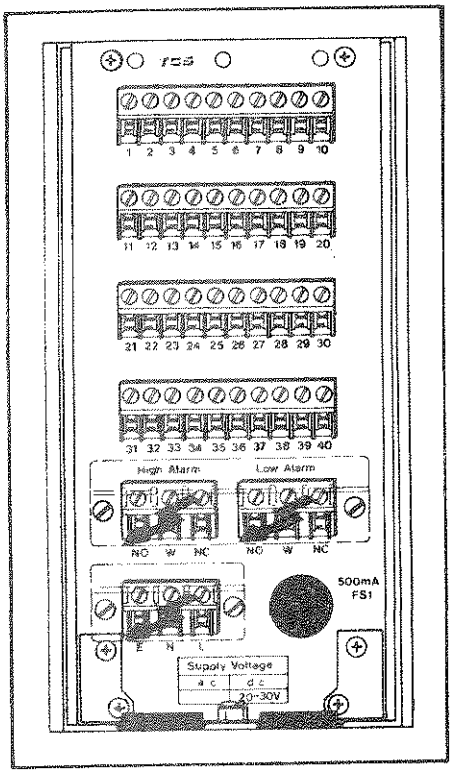

* Panel Mounting
* Modular Construction
* All Module Connections Available Via Screw Terminals
* 24V DC and Mains Powered
* Incorporates High and Low Alarm Relays

REAR VIEW WITH TERMINAL COVERS REMOVED
DRAWING SHOWS 1WAY/MAINS POWERED VERSION

The 7360 Rear Termination assembly enables 6360 Bar-Graph Process Controllers to be fitted into 7900 single or multi-way sleeves. Each 7360 assembly allows an associated 6360 module to function as a stand- alone instrument and enables it to be fitted into conventional panel cut-outs.

The Block Diagram shows that the 7360 contains a mains transformer and bridge rectifier assembly. A 0.5A screw-in type fuse is provided and 110V or 240V AC operation is selected internally. The mains input terminals have a separate 3-way connector block (47-49), while a further terminal (30) may be used for a 24V DC input or back-up supply, if required.

The High and Low logic alarm outputs are used to drive separate relays whose outputs appear on individual screw connector blocks (41-43, 44-46). The earth and voltage free contacts of these 2A relays are fitted with transient suppression circuitry.

The inter-connections between the 7360 screw terminals and the 6360 module pins are given in the cross-reference table which lists all those connections not shown in the Block Diagram.

Turnbull Control Systems Limited
Broadwater Trading Estate Worthing Sussex BN14 8NW
Telephone Worthing (0903)205277
Telex 87437

SLEEVE TERMINAL NUMBER	MODULE PIN NUMBER	FUNCTION		OPTION (S3)
1	41	TX.SUPP(+)		
2	10*	PV.IN	1-5V INPUTS	S3/1 ON
3	11*	REM.SP.IN		S3/2 ON
4	12*	SP.TRIM.IN		S3/3 ON
5	45	3T.OUT.ISOL(+)		
6	32	3T.OUT	0-10V OUTPUTS	
7	33	PV.OUT		
8	34	SP/DEV.OUT		
9	35	XMT.OUT(-)	RS422	
10	36	XMT.OUT(+)		
11	40	TX.SUPP(-)		
12	2*	0V.REF	1-5V INPUTS	S3/1 ON
13	2*	0V.REF		S3/2 ON
14	2*	0V.REF		S3/3 ON
15	43	3T.OUT.ISOL(-)		
16	13	PV.IN	0-10V INPUTS	S3/1 OFF
17	14	REM.SP.IN		S3/2 OFF
18	15	SP.TRIM.IN		S3/3 OFF
19	37	RCV.IN(-)	RS422	
20	38	RCV.IN(+)		
21	16*	HI.ALM.OUT(0)	DIGITAL OUTPUTS	
22	17*	LO.ALM.OUT(0)		
23	18	HW.ALM.OUT(0)		
24	19	BAT.LO.OUT(0)		
25	20	REM.AUT.OUT(0)		
26	21	HOLD.MAN.OUT(0)		
27	22	BIT.1.OUT(1)		
28	23	BIT.2.OUT(1)		
29	9	W.DOG.OUT(1)		
30	*	DC SUPP.IN		
31	24	ADD.1.IN(1)	DIGITAL INPUTS	
32	25	ADD.2.IN(1)		
33	26	ADD.4.IN(1)		
34	27	ADD.8.IN(1)		
35	28	COMP.EN.IN(1)		
36	29	REM.SP.EN.IN(1)		
37	30	TRACK.EN.IN(1)		
38	31	HOLD.EN.IN(1)		
39	2*	0V.REF		
40	3*	0V.POW		
41	*	N/O	HIGH	
42	*	WIPER	ALARM	
43	*	N/C	RELAY	
44	*	N/O	LOW	
45	*	WIPER	ALARM	
46	*	N/C	RELAY	
47	*	EARTH	AC	
48	*	NEUTRAL	MAINS	
49	*	LINE		

PINS MARKED * APPEAR ON THE BLOCK DIAGRAM, ALL OTHER CONNECTIONS ARE DIRECT FROM MODULE TO SLEEVE.

OPTIONS: S3-ON = 1-5V INPUTS
S3-OFF = 0-10V INPUTS

TECHNICAL SPECIFICATION

(A) Electrical

a) Analogue Inputs

No. of Channels	: 3 direct non-isolated 0-10V inputs.
	: 3 non-isolated 1-5V inputs.
Channel Functions	: Channel 1 = Process Variable.
	: Channel 2 = Remote Setpoint/ Ratio Process Variable.
	: Channel 3 = Setpoint Trim/ Track/Measured Power.

b) Analogue Outputs

No. of Channels	: 3 direct non-isolated 0-10V outputs.
	: 1 isolated 4-20mA output (Channel 1).
Channel Functions	: Channel 1 = 3-term control output.
	: Channel 2 = Process Variable output.
	: Channel 3 = Setpoint/Amplified deviation output.

c) Digital Inputs

No. of Inputs	: 8 non-isolated inputs.
Input Voltage Levels	: 15V = logic one 0V = logic zero

d) Digital Outputs

No. of Outputs	: 8 non-isolated outputs plus Watchdog.
Output Voltage Levels	: 15V = logic one 0V = logic zero

e) Relay Outputs

No. of Relays	: 2
Type	: Single-pole changeover
Function	: High alarm relay Low alarm relay
Rating	: 2A earth and voltage free contacts fitted with transient suppression

(B) Power Supplies

a) Supply Inputs

Mains Version	: 110V AC at 290mA rms 240V AC at 130mA rms
24V DC Version	: 20-30V DC at 680mA
Back-up Supply Input	: 20-30V DC on mains versions only

b) Supply Outputs

External Transmitter Supply	: 26V ± 1.5V at 4mA output : 30V ± 0.5V at 20mA output

c) Fuse Rating : Separate 0.5A screw-in type fuse provided with mains versions only

1	2	3	4	5	6	7	8	9	10
TX SUPP (+)	PV. IN 1-5V (4-20mA)	REM. SP. IN 1-5V (4-20mA)	SP. TRM. IN 1-5V (4-20mA)	3T OUT ISOL (+)	3T OUT	PV. OUT	SP/DEV OUT	XMT OUT (-)	XMT OUT (+)

CURRENT INPUTS / OUTPUTS — VOLTAGE INPUTS / OUTPUTS — COMMS

11	12	13	14	15	16	17	18	19	20
TX SUPP (-)	0V REF	0V REF	0V REF	3T OUT ISOL (-)	PV. IN (0-10V)	REM. SP. IN (0-10V)	SP. TRM. IN (0-10V)	RCV IN (-)	RCV IN (+)

21	22	23	24	25	26	27	28	29	30
HI. ALM OUT (0)	LO. ALM OUT (0)	HW ALM OUT (0)	BAT LO OUT (0)	REM AUT OUT (0)	HLD + MAN. OUT (0)	BIT 1 OUT (1)	BIT 2 OUT (1)	W.DOG OUT (1)	24V DC IN

DIGITAL INPUTS / OUTPUTS — PWR SUPS

31	32	33	34	35	36	37	38	39	40
ADD. 1 IN (1)	ADD. 2 IN (1)	ADD. 4 IN (1)	ADD. 8 IN (1)	COMP. EN IN (1)	REM. SP. EN IN (1)	TRACK EN IN (1)	HOLD. EN IN (0)	0V REF	0V P

RELAY RATING 2 AMPS

HIGH ALARM RELAY		
*NO	W	*NC
41	42	43

LOW ALARM RELAY		
*NO	W	*NC
44	45	46

*NOTE: RELAY CONTACT DESIGNATIONS ARE FOR THE UNPOWERED/ALARM STATE

MAINS CONNECTIONS		
E	N	L
47	48	49

PROCESS CONTROLLER 7360

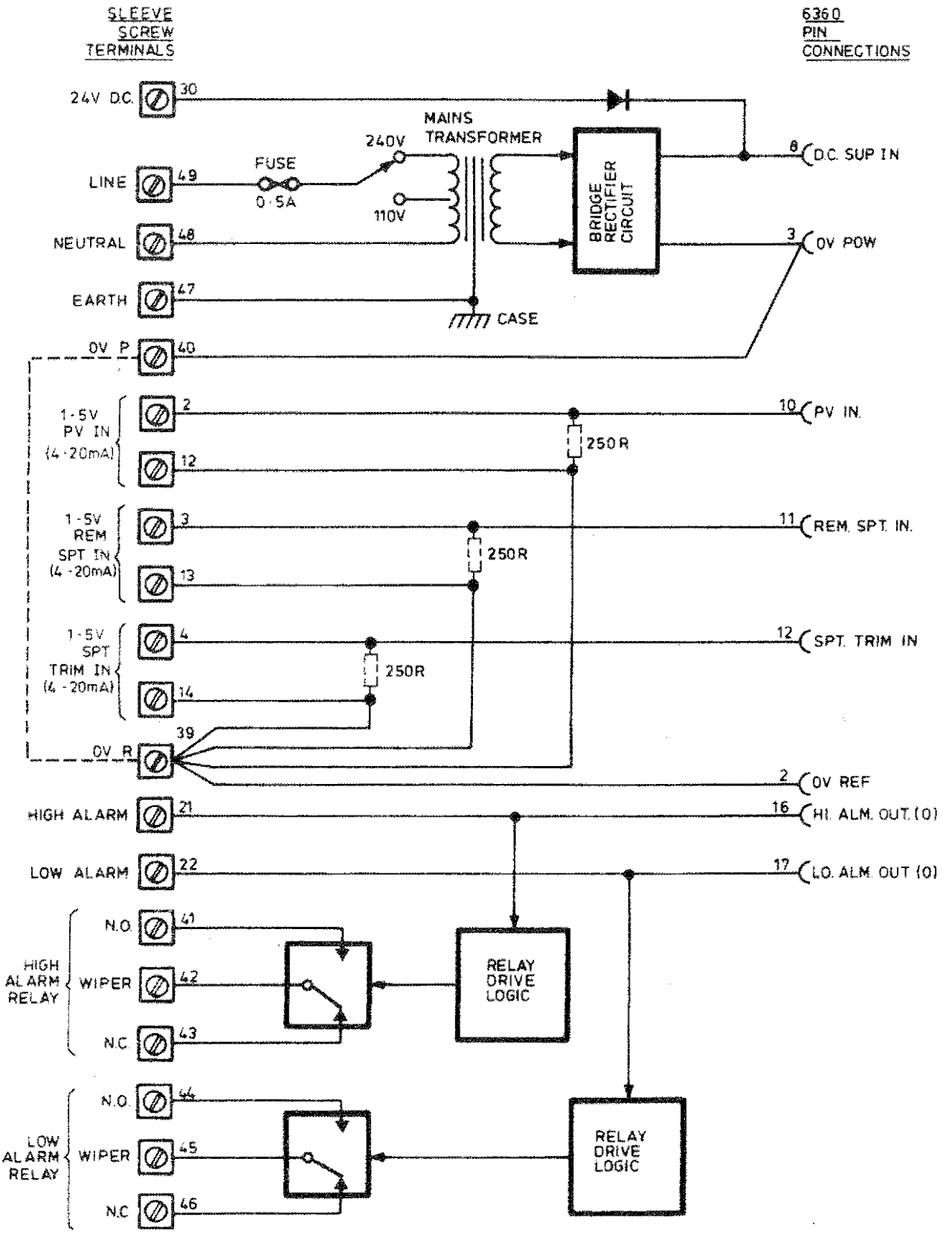
SLEEVE SCREW TERMINALS
6360 PIN CONNECTIONS
24V D.C.
30
MAINS TRANSFORMER
240V
110V
FUSE
0·5A
LINE
49
NEUTRAL
48
EARTH
47
CASE
BRIDGE RECTIFIER CIRCUIT
8
D.C. SUP IN
3
0V POW
0V P
40
1·5V PV IN (4-20mA)
2
12
250R
10
PV IN.
1·5V REM SPT IN (4-20mA)
3
13
250R
11
REM. SPT. IN.
1·5V SPT TRIM IN (4-20mA)
4
14
250R
12
SPT. TRIM IN
39
0V R
2
0V REF
HIGH ALARM
21
16
HI. ALM. OUT. (0)
LOW ALARM
22
17
LO. ALM. OUT (0)
HIGH ALARM RELAY
N.O.
41
WIPER
42
N.C.
43
RELAY DRIVE LOGIC
LOW ALARM RELAY
N.O.
44
WIPER
45
N.C.
46
RELAY DRIVE LOGIC

AN I/PS

INPUT	OFF *	ON *	PROC FUNCT
TRIM/TRACK/M PWR *	0-10V	1-5V	NOT USED
REM SP/~~RATIO PV~~*	0-10V	1-5V	NOT USED
PROCESS VARIABLE	0-10V	1-5V	LINEAR

*DELETE AS APPLICABLE

4 3 2 1 — ON / OFF — STATUS SWITCH S3

MODE SELECTION

FUNCTION	OFF *	ON *
PROTOCOL SELECT	ASCII	BINARY
INTEGRAL TERM BAL	ENABLE	DISABLE
TIME CONST (TI, TD)	SECS	MINS
CH 3 FUNCT SELECT	SET PT	DEV'N
AUTO SP MODE	CONST	TRACK PV
FAIL MODE POWER	PREV MODE	MAN-LOW
FAIL MODE DC INPUT	MANUAL	MAN-LOW
OUTPUT MODE	DIR	INV
RATIO MODE	NORM	INV
O/P DISPLAY INVERSION	NORM	INV
RATIO ENABLE	NORM	RATIO

SERIAL COMMS

GID	BAUD RATE	UID
0	110	

1 2 4 — (RACK WIRED)

8 7 6 5 4 3 2 1 — ON / OFF — STATUS SWITCH S1 (LEFT)

8 7 6 5 4 3 2 1 — ON / OFF — STATUS SWITCH S2 (RIGHT)

PARAMETER TYPE	PARAMETER FUNCTION	MNEMONIC ALWAYS PRES	MNEMONIC S2 NO 1 OFF (NORM)	MNEMONIC S2 NO 1 ON (RATIO)	VALUE (4 CHARS)	UNITS (ALL ENG EXCEPT AS SHOWN)
STATUS WORDS	DECIMAL POINT POSITION	DP			2222	
	I/P CHAN PROC & PUSHBUTTON DISABLE	IC			0000	
INPUT CHANNEL RANGING CH1	PROCESS VARIABLE HIGH RANGE	1H			99.99	
	PROCESS VARIABLE LOW RANGE	1L			00.00	
CH2	RATIO P VAR HIGH RANGE			2H	–	
	RATIO P VAR LOW RANGE			2L	–	
CH3	TRIM/MEASURED POWER HIGH RANGE	3H			00.00	
	TRIM/MEASURED POWER LOW RANGE	3L			00.00	
LIMIT AND ALARM SETTINGS	RATIO SETPOINT HIGH LIMIT			HR	–	
	RATIO SETPOINT LOW LIMIT			LR	–	
	SETPOINT HIGH LIMIT	HS			99.99	
	SETPOINT LOW LIMIT	LS			00.00	(AS, 1H, 1L)
	HIGH ABSOLUTE ALARM LIMIT	HA			10.00	
	LOW ABSOLUTE ALARM LIMIT	LA			10.00	
	HIGH DEVIATION ALARM LIMIT	HD			99.99	
	LOW DEVIATION ALARM LIMIT	LD			00.00	
	3 TERM OUTPUT HIGH LIMIT	HO			99.99	%
	3 TERM OUTPUT LOW LIMIT	LO			00.00	
3 TERM CONTROL ALGORITHM RELATED PARAMETERS	ERROR LIMIT	EL			99.99	%
	INPUT CHANNEL FILTER CONSTANT	TF			00.50	SECS
	PROPORTIONAL BAND CONSTANT	PB			025.0	%
	INTEGRAL TIME CONSTANT	TI			02.00	SECS/MINS*
	DERIVATIVE TIME CONSTANT	TD			00.00	
SETPOINT RELATED PARAMETERS	LOCAL SETPOINT	SL			AIR	(AS, 1H, 1L)
	RATIO SETPOINT			RS	–	(AS HR, LR)
	RATIO BIAS			RB	–	(AS 1H, 1L)
STATUS WORDS	CONTROLLER OPERATING MODES	MD				

ISS	DATE	COMPILED	INSTRUMENT IDENTITY II	FUNCTION
1	3.6.86		6360/2	SPECIMEN
		CHECKED	SERIAL NO. —	

TCS TURNBULL CONTROL SYSTEMS LTD

6360 CONTROLLER SET-UP DATA SHT

AN I/PS

INPUT	OFF *	ON *	PROC FUNCT
TRIM/TRACK/M PWR *	0-10V	1-5V	
REM SP/RATIO PV *	0-10V	1-5V	
PROCESS VARIABLE	0-10V	1-5V	

*DELETE AS APPLICABLE

4 3 2 1 — ON / OFF — STATUS SWITCH S3

MODE SELECTION

FUNCTION	OFF *	ON *
PROTOCOL SELECT	ASCII	BINARY
INTEGRAL TERM BAL	ENABLE	DISABLE
TIME CONST (TI, TD)	SECS	MINS
CH 3 FUNCT SELECT	SET PT	DEV'N
AUTO SP MODE	CONST	TRACK PV
FAIL MODE POWER	PREV MODE	MAN-LOW
FAIL MODE OC INPUT	MANUAL	MAN-LOW
OUTPUT MODE	DIR	INV
RATIO MODE	NORM	INV
O/P DISPLAY INVERSION	NORM	INV
RATIO ENABLE	NORM	RATIO

SERIAL COMMS

GID — 1 2 4

BAUD RATE

UID (RACK WIRED)

8 7 6 5 4 3 2 1 — ON / OFF — STATUS SWITCH S1 (LEFT)

8 7 6 5 4 3 2 1 — ON / OFF — STATUS SWITCH S2 (RIGHT)

PARAMETER TYPE	PARAMETER FUNCTION	MNEMONIC ALWAYS PRES	MNEMONIC S2 NO 1 OFF (NORM)	MNEMONIC S2 NO 1 ON (RATIO)	VALUE (4 CHARS)	UNITS (ALL ENG EXCEPT AS SHOWN)
STATUS WORDS	DECIMAL POINT POSITION	DP			4447	
	I/P CHAN PROC. & PUSHBUTTON DISABLE	IC			FFFF	
INPUT CHANNEL RANGING CH1	PROCESS VARIABLE HIGH RANGE	1H				
	PROCESS VARIABLE LOW RANGE	1L				
CH2	RATIO P VAR HIGH RANGE			2H		
	RATIO P VAR LOW RANGE			2L		
CH3	TRIM/MEASURED POWER HIGH RANGE	3H				
	TRIM/MEASURED POWER LOW RANGE	3L				
LIMIT AND ALARM SETTINGS	RATIO SETPOINT HIGH LIMIT			HR		
	RATIO SETPOINT LOW LIMIT			LR		
	SETPOINT HIGH LIMIT	HS				
	SETPOINT LOW LIMIT	LS				(AS, 1H, 1L)
	HIGH ABSOLUTE ALARM LIMIT	HA				
	LOW ABSOLUTE ALARM LIMIT	LA				
	HIGH DEVIATION ALARM LIMIT	HD				
	LOW DEVIATION ALARM LIMIT	LD				
	3 TERM OUTPUT HIGH LIMIT	HO				%
	3 TERM OUTPUT LOW LIMIT	LO				
3 TERM CONTROL ALGORITHM RELATED PARAMETERS	ERROR LIMIT	EL				%
	INPUT CHANNEL FILTER CONSTANT	IF				SECS
	PROPORTIONAL BAND CONSTANT	XP				%
	INTEGRAL TIME CONSTANT	TI				SECS/MINS*
	DERIVATIVE TIME CONSTANT	TD				
SETPOINT RELATED PARAMETERS	LOCAL SETPOINT	SL				(AS, 1H, 1L)
	RATIO SETPOINT			RS		(AS HR, LR)
	RATIO BIAS			RB		(AS 1H, 1L)
STATUS WORDS	CONTROLLER OPERATING MODES	MD				

ISS	DATE	COMPILED	INSTRUMENT IDENTITY II	FUNCTION
			6360/2	
		CHECKED	SERIAL NO.	

TCS TURNBULL CONTROL SYSTEMS LTD

6360 CONTROLLER SET-UP DATA SHT

KE 075530

Software part number :- RD 075228 issue 2, release 1

Table 4.1 lists the 2 character command parameters of the 6360 Process Controller used when accessing data via the 8260 Hand-held Terminal or the ASCII mode of the RS422 serial link protocol (see Section 5 of the System 6000 Communications Handbook). Table 5.1 lists the corresponding Parameter Numbers used with the Binary mode of the protocol (see Section 6 of the System 6000 Communications Handbook). The table below shows the modification history of the 6360 software with respect to changes in these parameter tables :-

SOFTWARE		DATE	MEMORY BOARD	PROMS		REMARKS
ISS.	REL			TYPE	NO	
1	1	15/06/83	Mk 3 (001) (002)	 2532 2732	 2 2	Initial Release
1	2	01/02/84	Mk 5 (001)	2764	1	As issue 1/1 but runs on Mk 5 memory (001) with Mk 1 CPU (9980)
1	3	06/03/84	Mk 5 (002)	2764	1	As issue 1/2 but runs with Mk 2 CPU card (9995).
1	4	01/08/85	Mk 6 (010)	27128	1	As issue 1/3 but runs with Mk 6 memory card version 010 [Note that some 6360's were built with version 002 Mk 6 memories]
2	1	01/11/85	Mk 6 (010)	27128	1	New issue of software incorporating the following features:- a) Output display inversion (S2 no. 2) b) Improved RATIO alogorithm c) ON/OFF Control d) LED test bit (MD bit 5) e) Measured Power display select moved to MD bit 4 f) Parameter change of state bit and power failure warning bit added to MN parameter

MANUAL ISS.	MANUAL REV	DATE	PAGE	AMENDMENT
1	A	04/84		Initial release
1	B	09/84		Minor typographical corrections plus the following changes :-
			1.5	Table 1.1 - change Memory from Mk 3 to Mk 5
			1.18	Section 1.5.8 g) - battery type now 3.0V at 160mAh
			2.7	Note added at foot of page
			3.53	Section 3.12.2 - last item of equation (4) is 50% not 5V, and note added at foot of page
			4.41	Section 4.8.6 - extra paragraph added
			A.2	Appendix A - aids to wiring section now included
			E.1	Appendix E - table re-formatted to provide more information
2	A	06/86		Modifications to include new facilities of issue 2 software.
			4.1	Fig. 4.1 shows new 8260 Hand-held terminal.

ISS.	DATE	ISS.	DATE	TECHNICAL MANUAL AMENDMENT RECORD SHEET		
1	25/09/84			DRAWN : KGW	MANUAL TITLE :	
2	07/05/86			CHECKED :	6360 Technical Manual	
				APPROVED :	PRODUCT CODE : 6360	
				TURNBULL CONTROL SYSTEMS LTD.	DRAWING NO. ZZ 075415C	SHT 1 OF 1 SHTS